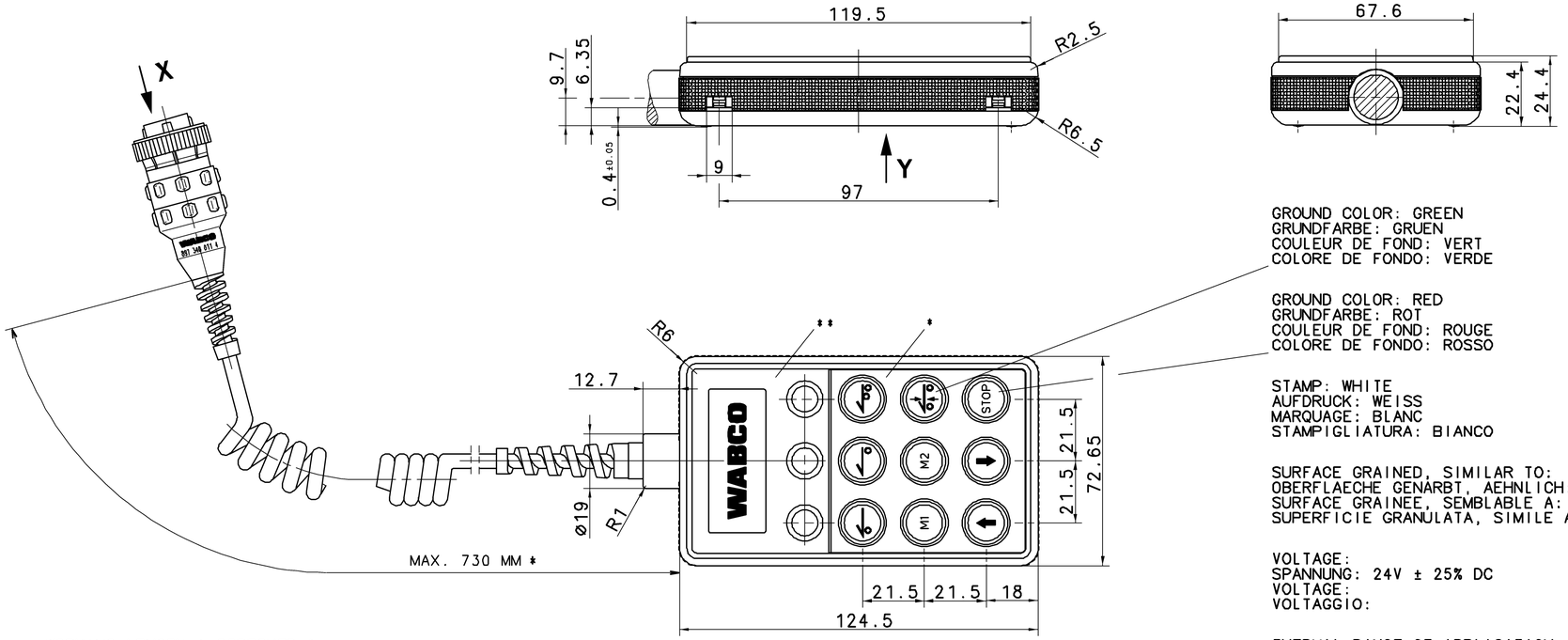

GROUND COLOR: GREEN
GRUNDFARBE: GRUEN
COULEUR DE FOND: VERT
COLORE DE FONDO: VERDE

GROUND COLOR: RED
GRUNDFARBE: ROT
COULEUR DE FOND: ROUGE
COLORE DE FONDO: ROSSO

STAMP: WHITE
AUFDRUCK: WEISS
MARQUAGE: BLANC
STAMPIGLIATURA: BIANCO

SURFACE GRAINED, SIMILAR TO:
OBERFLAECHE GENARBT, AEHNLICH: JED-533-035 (VDI 3400 REF. 24) *
SURFACE GRAINEE, SEMBLABLE A: JED-533-038 (VDI 3400 REF. 33) **
SUPERFICIE GRANULATA, SIMILE A:

VOLTAGE:
SPANNUNG: 24V ± 25% DC
VOLTAGE:
VOLTAGGIO:

THERMAL RANGE OF APPLICATION:
THERMISCHER ANWENDUNGSBEREICH -40°C...+70°C
PLAGE DE TEMPERATURE EN UTILISATION:
CAMPO TERMICO DI APPLICAZIONE:

TYPE OF PROTECTION: EXCEPT CONNECTOR
SCHUTZART: IP 64 AUSSER STECKER
MODE DE PROTECTION: SAUF CONNECTEUR
TIPO DI PROTEZIONE: ECCETTO CONNETTORE

FURTHER TECHNICAL DATA SEE PRODUCT SPECIFICATION
WEITERE TECHNISCHE DATEN SIEHE PRODUKTSPEZIFIKATION
POUR AUTRES DONNEES TECHNIQUES VOIR PRODUCT SPECIFICATION
PER ULTERIORI DATI TECHNICI VERDERE SPECIFICA DI PRODOTTO

WORKING LENGTH (STRECKED)
* ARBEITSLAENGE (GESTRECKT) MAX. 2000 MM
LONGEUREDE TRAVAIL (CONNECTE)
LUNGHEZZA DI LAVARO (STESO)

DATE OF MANUFACTURE:
HERSTELLDATUM: JED-226
DATE DE FABRICATION:
DATA DI FABRICAZIONE:

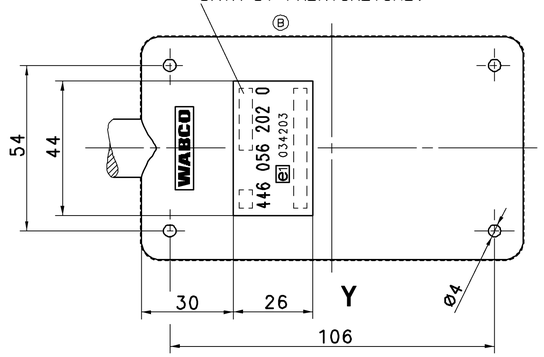

X
2:1

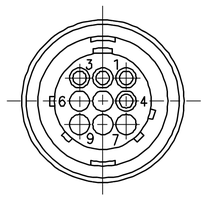

1	+UB	KL.15 KL.30
2	GROUND MASSE	KL.31
3	CLOCK TAKT	
4	DATA DATEN	

GENERAL SPECIFICATION: JED-334			
FURTHER TECHNICAL DATA:			
DOC. CODE:	SHEET: 10		
111723	1xB	06-12-12	
0934B1	1xA	05-02-02	
DCN-NO.	REV.	DATE	

GENERAL TOLERANCES

CLASS 1)	RANGE OF NOMINAL DIMENSIONS (± mm) ≤50	>50 ≤180	>180 ≤400	>400	∠
FINE	0,5	1,0	1,5	2,0	
MEDIUM	1,0	2,0	3,0	4,0	± 3°
COARSE	2,0	3,5	5,0	6,5	
TAPPED HOLES ACC. ISO 4039 / JED-152					

1) TOLERANCE CLASS APPLIED CROSSMARKED

CADAM-DRAWING COPYRIGHT
DATE SIGNATURE
DRAWN: 00-09-13 PFENNIG
CHECKED: 00-09-13 HARTMANN ME.
STANDARDIZATION:

WABCO

CONTROL ELEMENT
BEDIENEINHEIT
ELEMENT DE COMMANDE
ELEMENTO DI COMANDO

MASS 0.30 KG | SCALE 1:1 2:1 | PRODUCT IDENTIFICATION NO. 446 056 202 0 | DOC. CODE 605 | SHEET 1/1
SIZE A 1 | T.R.I. 620 | SHAPE CODE | REPLACEMENT FOR

100mm

EXPERI CODE 0 4 7

PRODUCT TYPE 0 2 ☒

1509/018/3/04-03
603/653

TOUTE COMMUNICATION OU REPRODUCTION DE CE DOCUMENT, TOUTE EXPLOITATION OU COMMUNICATION DE SON CONTENU OU DONT IL FAIT L'OBJET, SONT INTERDITES SAUF AUTORISATION ECRITE. TOUS DROITS DE PROPRIETE INTELLECTUELLE SONT RESERVES.
NON È PERMESSO CONSEGNARE A TERZI O RIPRODURRE QUESTO DOCUMENTO, NE UTILIZZARE IL CONTENUTO O RIVELARNE IL COMPORTO FUORI DALLA SOCIETÀ PROPRIETARIA. TUTTI I DIRITTI DI PROPRIETÀ INTELLETTUALE SONO RISERVATI.
WEITERGABE SowIE VERVIELFÄLTIGUNG DIESER UNTERLAGE, VERWERTUNG UND MITTEILUNG IHRES INHALTS NICHT GESTATTET, SOWEIT NICHT AUSDRÜCKLICH ZUGESTANDEN. ZUWIDERHANDELNDEN WERDEN SCHADENSERSATZ FÜR DEN ENTSTANDENEN SCHADEN FÄLLIG. ALLE RECHTE VORBEHALTEN.
DRAWING OF THIS DOCUMENT, GIVING IT TO OTHERS AND THE USE OF COMMUNICATION OF THE CONTENTS THEREOF, ARE NOT PERMITTED WITHOUT EXPRESS AUTHORITY. OFFENDERS ARE LIABLE TO THE PAYMENT OF DAMAGES. ALL RIGHTS ARE RESERVED IN THE EVENT OF THE GRANT OF PATENT OR REGISTRATION OF A UTILITY MODEL OR DESIGN. THIS DOCUMENT IS THE SUBJECT OF COPYRIGHT.