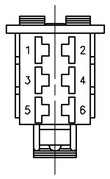

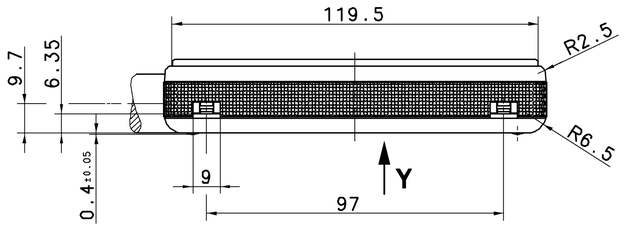

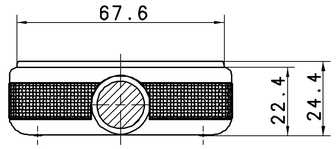

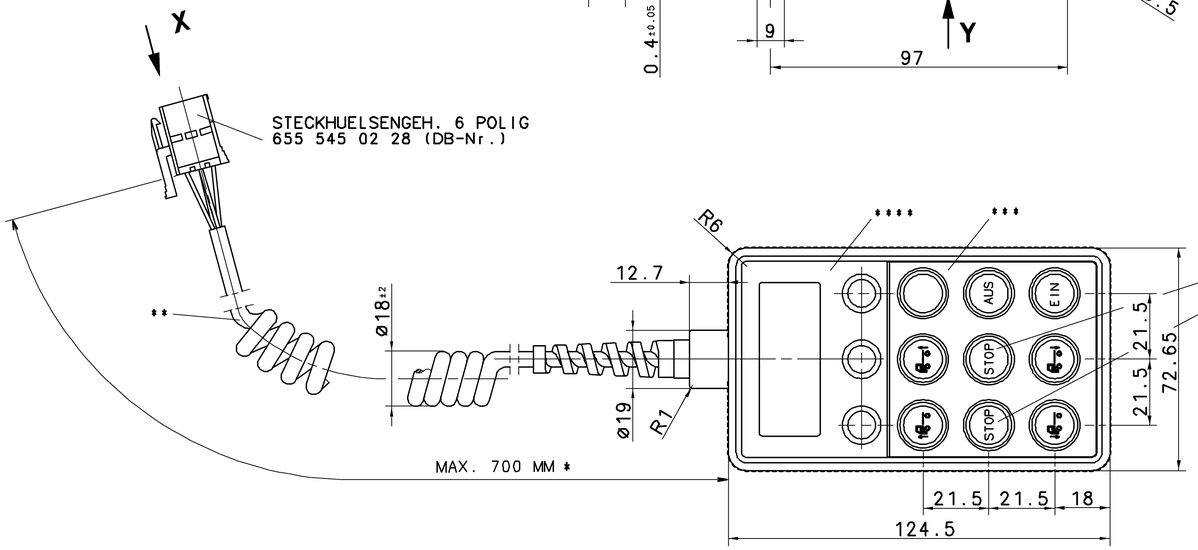

GROUND COLOR: RED
GRUNDFARBE: ROT
COULEUR DE FOND: ROUGE
COLORE DE FONDO: ROSSO

STAMP: WHITE
AUFDRUCK: WEISS
MARQUAGE: BLANC
STAMPIGLIATURA: BIANCO

SURFACE GRAINED, SIMILAR TO:
OBERFLAECHE GENARBT, AEHNLICH: JED-533-035 (VDI 3400 REF. 24)***
SURFACE GRAINEE,SEMBLABLE A: JED-533-038 (VDI 3400 REF. 33)****
SUPERFICIE GRANULATA, SIMILE A:

VOLTAGE:
SPANNUNG: 24V ± 25% DC
VOLTAGE:
VOLTAGGIO:

THERMAL RANGE OF APPLICATION:
THERMISCHER ANWENDUNGSBEREICH -40°C...+70°C
PLAGE DE TEMPERATURE EN UTILISATION:
CAMPO TERMICO DI APPLICAZIONE:

TYPE OF PROTECTION: EXCEPT CONNECTOR
SCHUTZART: IP 64 AUSSER STECKER
MODE DE PROTECTION: SAUF CONNECTEUR
TIPO DI PROTEZIONE: ECCETTO CONNETTORE

FURTHER TECHNICAL DATA SEE PRODUCT SPECIFICATION
WEITERE TECHNISCHE DATEN SIEHE PRODUKTSPEZIFIKATION
POUR AUTRES DONNEES TECHNIQUES VOIR PRODUCT SPECIFICATION
PER ULTERIORI DATI TECHNICI VERDERE SPECIFICA DI PRODOTTO

WORKING LENGTH (STRECKED)
* ARBEITSLAENGE (GESTRECKT) MAX. 2000 MM
LONGEUREDE TRAVAIL (CONNECTE)
LUNGHEZZA DI LAVARO (STESO)

PULLRELIEF NECESSARY
** KABELZUGENTLASTUNG ERFORDERLICH
ARRET DE CABLE NECESSAIRE
ARRESTO PER CAVO NECESSARIO

DATE OF MANUFACTURE:
HERSTELLDATUM: JED-226
DATE DE FABRICATION:
DATA DI FABRICAZIONE:

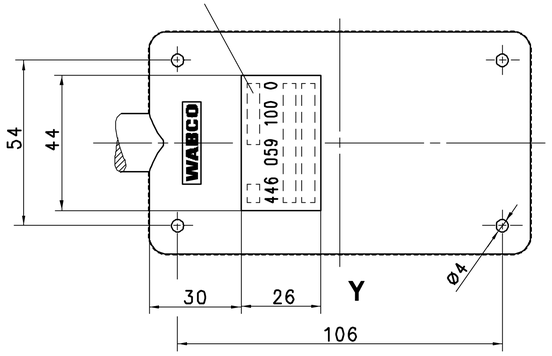

PUSHBUTTON TASTER		SOLENOID-VALVE MAGNETVENTIL MV III	MV IV
AUS	-	0	1
EIN		1	0
	STOP	0	0
		1	1

PUSHBUTTON TASTER		SOLENOID-VALVE MAGNETVENTIL MV I	MV II
AUS	-	0	1
EIN		1	0
	STOP	0	0
		1	1

0 = NOT TRIGGERED
0 = NICHT ANGESTEUERT

1 = TRIGGERED
1 = ANGESTEUERT

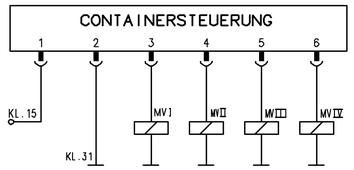

GENERAL SPECIFICATION:	JED-334
FURTHER TECHNICAL DATA:	
DOC. CODE:	SHEET: 10

GENERAL TOLERANCES

CLASS 1)	RANGE OF NOMINAL DIMENSIONS (± mm) ≤50	>50 ≤180	>180 ≤400	>400	∡
FINE	0,5	1,0	1,5	2,0	
MEDIUM	1,0	2,0	3,0	4,0	± 3°
COARSE	2,0	3,5	5,0	6,5	

TAPPED HOLES ACC. ISO 4039 / JED-152

1) TOLERANCE CLASS APPLIED CROSSMARKED

DCN-NO.	REV.	DATE

CADAM-DRAWING COPYRIGHT

DATE	SIGNATURE
02-09-26	DRAWN: PFENNIG
02-09-26	CHECKED: MEHNERT
	STANDARDIZATION:

WABCO

ECU,CONTAINER CONTROL
CONTAINERSTEUERUNG VA+HA

TELECOMANDO

MASS	SCALE	PRODUCT IDENTIFICATION NO.	DOC. CODE	SHEET
0.30 KG	1:1 2:1	446 059 100 0	605	1/1
SIZE A 1	T.R.I. 142		SHAPE CODE	REPLACEMENT FOR

100mm

EXPERT CODE 0 5 0

PRODUCT TYPE

TOUTE COMMUNICATION OU REPRODUCTION DE CE DOCUMENT, TOUTE EXPLOITATION OU COMMUNICATION DE SON CONTENU OU REMISE DE COPIES SONT INTERDITES SAUF AUTORISATION ECRITE. TOUS DROITS DE PROPRIETE INDUSTRIELLE ET INTELLECTUELLE SONT RESERVES.
NON È PERMESSO CONSEGNARE A TERZI O RIPRODURRE QUESTO DOCUMENTO, NE UTILIZZARNE IL CONTENUTO O RIVELARNE IL CONTENUTO SENZA AUTORIZZAZIONE SCRITTA. TUTTI I DIRITTI DI PROPRIETÀ INTELLETTUALE SONO RISERVATI.
WEITERGABE SOWIE VERVIELFÄLTIGUNG DIESER UNTERLAGE, VERWERTUNG UND MITTEILUNG IHRES INHALTS NICHT GESTATTET SOFERN NICHT AUSDRÜCKLICH ZUGESTANDEN. ZUWIDERHANDLUNGEN SETZEN EINEN SCHADENSERSATZANSPRUCH. ALLE RECHTE VORBEHALTEN.
NO PART OF THIS DOCUMENT, AND GIVING IT TO OTHERS AND THE USE OF COMMUNICATION OF THE CONTENTS THEREOF, IS PERMITTED WITHOUT WRITTEN AUTHORISATION. ALL RIGHTS RESERVED INCLUDING THE EXTENSION OF THE RIGHTS OF PATENT OR REGISTRATION OF A UTILITY MODEL OR DESIGN. THIS DOCUMENT IS THE SUBJECT OF COPYRIGHT.