WORKING MEDIUM: ANTI-FREEZE - WATER MIXTURE G48 (OR G12) MAX 1:1

MEDIUM TEMPERATURE: -40 ... +120°C

AMBIENT TEMPERATURE: -40 ... +80°C

PERMISSIBLE EXCESS PRESSURE: 2,0 bar (50.000 CYCLES 0.5 ... 3.0 bar AT +90°C FLUID TEMPERATURE)

FLOW RATE: SEE DIAGRAM

OPERATING TORQUE: ≤ 30 Ncm

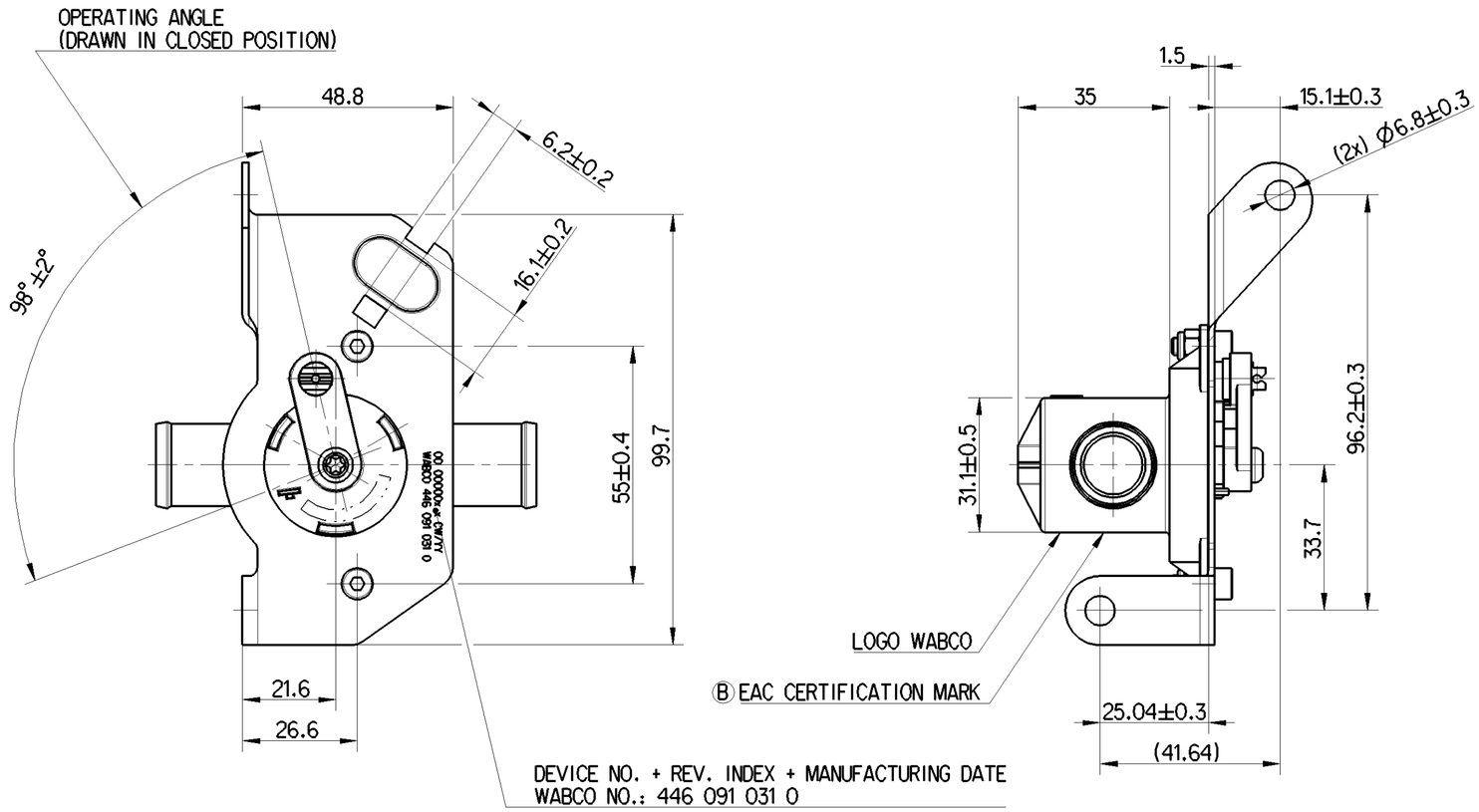

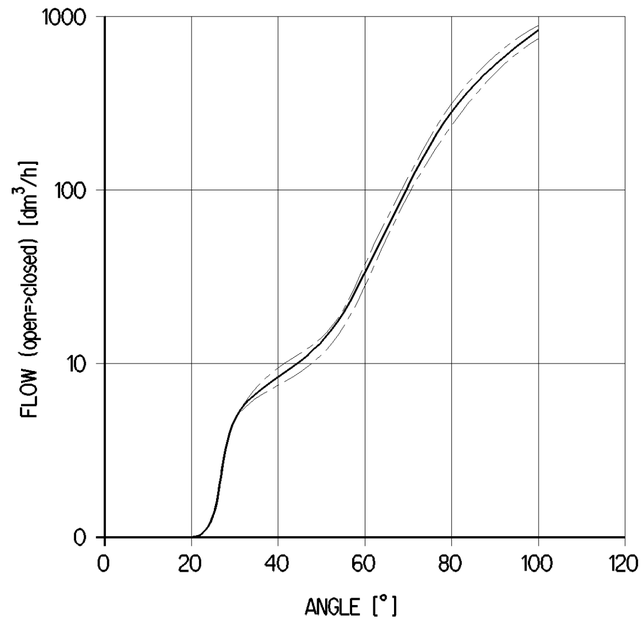

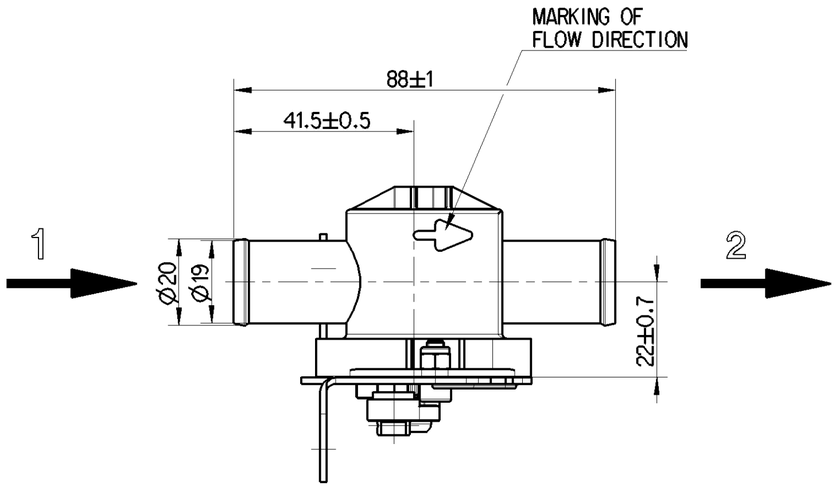

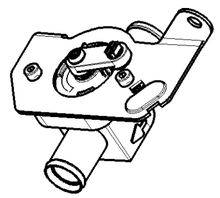

1:2

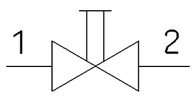

1 INFLOW

2 OUTFLOW

General Specification: JED-334-1 , Size ISO 14405 LP						
Further Technical Data: 4460910310						
Doc. Code: 035			Sheet: 1 To 7			
General Tolerances JED-261						
		Range of Nominal Dimensions (± mm)				
Class 1)		≤ 50	> 50 ≤ 180	> 180 ≤ 400	> 400	∠
Fine	X	0.5	1.0	1.5	2.0	±3°
Medium		1.0	2.0	3.0	4.0	
Coarse		2.0	3.5	5.0	6.5	
Tapped Holes acc. -						
1) Tolerance Class Applied Crossmarked						

Copyright WABCO®

Date	Signature
Drawn 2019-03-19	Kolkowski
Checked 2019-03-25	Marcinkiewicz
Expert Kolkowski	

WABCO

WATER VALVE

Mass	Scale	Material No.	Date of first issue: 2018-12-05
0.142 KG	1:1 (1:2)	446 091 031 0	Doc.Code 005 / Language EN / Sheet 1/1
Size A 2	CAD System CREO	ECN-No. 501027 / Revision 1 x B / Techn. Resp. 6570_AM	Replacement for

100mm

Non è permesso consegnare a terzi o riprodurre questo documento, né utilizzarne il contenuto o renderlo comunque noto a terzi senza autorizzazione esplicita. Ogni infrazione costituirà un evidente abuso e comporterà il risarcimento dei danni subiti. E' fatta riserva di tutti i diritti derivanti da brevetti o modelli.

Copying of this document and giving it to others and the use or communication of the contents thereof, are forbidden without express authority. Contravention of this restriction will constitute an evident abuse and result in a liability to the payment of damages. All rights are reserved in the event of the grant of patent or registration of a utility model or design. This document is the subject of copyright.

Toute Communication ou reproduction de ce document, toute exploitation ou communication de son contenu sont interdites, sauf autorisation expresse. Tout manquement à cette règle constitue un abus évident et expose son auteur au versement de dommages et intérêts. Tous droits de propriété industrielle réservés, notamment en matière de brevets et de modèles.

Weitergabe sowie Vervielfältigung dieser Unterlage, Verwertung und Mitteilung ihres Inhalts nicht gestattet, soweit nicht ausdrücklich zugesprochen. Zuwiderhandlungen stellen einen offensichtlichen Mißbrauch dar und verpflichten zu Schadensersatz. Alle Rechte für den Fall der Patenterteilung oder Gebrauchsmuster-Eintragung vorbehalten.