SURFACE PROTECT/OBERFL. SCHUTZ/PROTECTION DE SURFACE/PROTEZIONE DI SUPERFICIE	
I	JED-259, JED-461
II	JED-570.345
III	JED-378

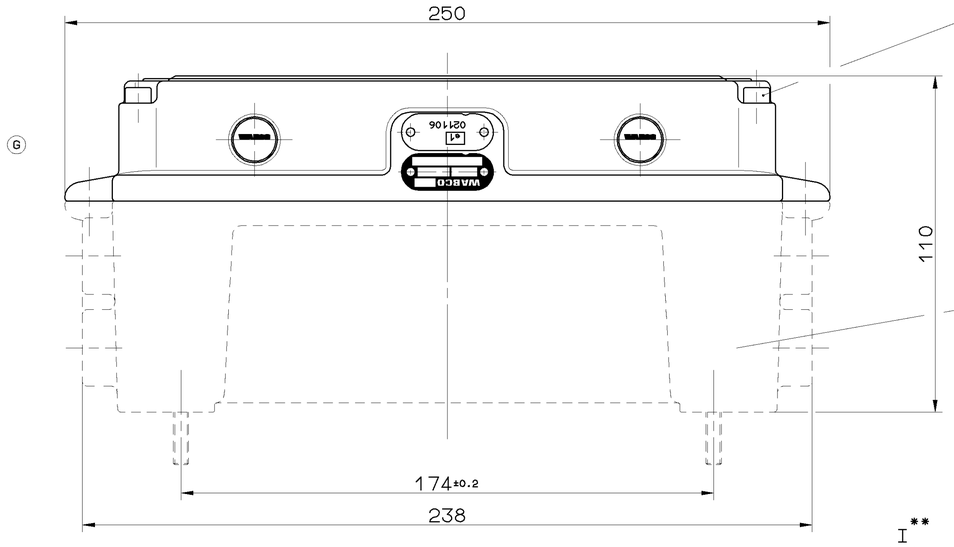

III *
TORQUE
ANZUGSMOMENT $M_A = 6^{+2}_{-0}$ Nm
COUPLE DE SERRAGE
COPPIA DI SERRAGGIO
F

VOLTAGE
SPANNUNG
VOLTAGE
VOLTAGGIO
2

THERMAL RANGE OF APPLICATION
THERMISCHER ANWENDUNGSBEREICH
GAMME D' APPLICATION THERMIQUE
CAMPO DI APPLICAZIONE THERMICA
-40° ...+65° C

TYPE OF PROTECTION
SCHUTZART IN MONTIERTEM ZUSTAND NACH IEC 529
MODE DE PROTECTION
TIPO DI PROTEZIONE
IP 54

FURTHER TECHNICAL DATE SEE PRODUCT SPECIFICATION
WEITERE TECHNISCHE DATEN SIEHE PRODUKT SPEZIFIKATION
POUR INFORMATION COMPLEMENTAIRES VOIR LES SPECIFICATIONS DU PRODUIT
PER INFORMAZIONI ULTERIORI VEDI LA SPECIFICAZIONE DEL PRODOTTO

* DELIVERY INCLUDES
GEHOERT ZUM LIEFERUMFANG
LA LIVRAISON COMPREND
LA CONSEGNA COMPRENDE

** COLOR / FARBE / COULEUR / COLORE: GRAY / GRAU RAL 7001 / GRISE / GRIGIO

3 ON SEPARATE ORDER ONLY
NUR AUF GESONDERTE BESTELLUNG
SEULEMENT SUR COMMANDE SEPAREE
SOLO SU ORDINE SEPARATO

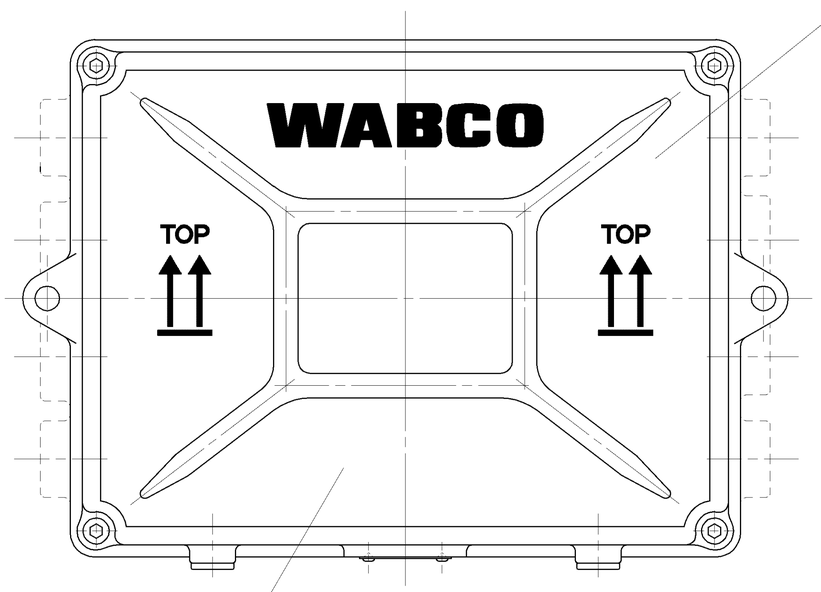

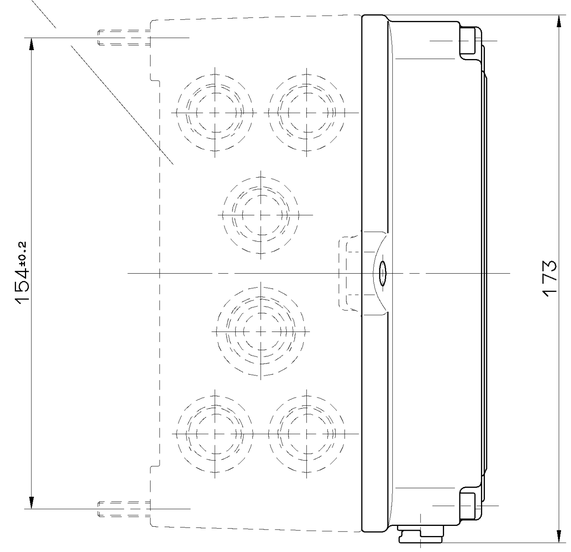

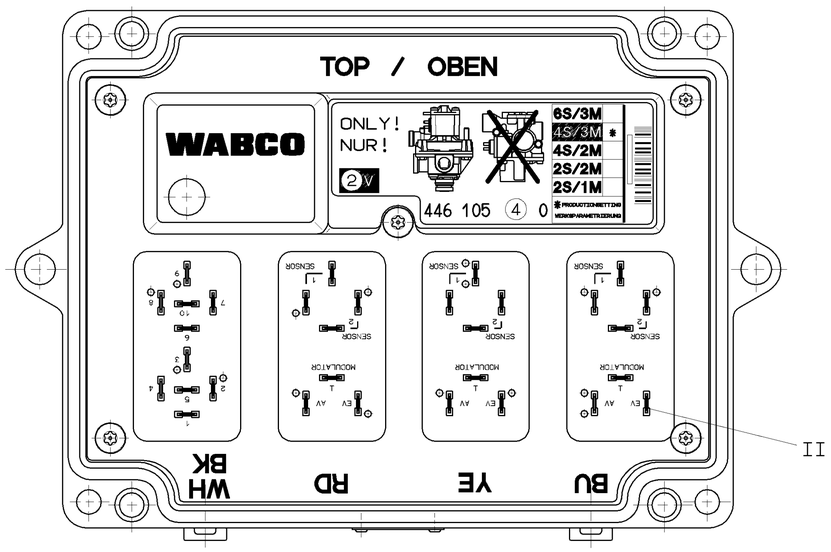

INSTALLATION POSITION
EINBAULAGE
POSITION D, INSTALLATION
POSIZIONI DI MONTAGGIO

CONFIGURATION OF THE SYSTEM SYSTEMKONFIGURATION CONFIGURATION DU SYSTEME CONFIGURAZIONE DEL SISTEMA	INSTALLATION ACCESSORIES INSTALLATIONSMATERIAL MATERI AUX D' INSTALLATION MATERIALE D' INSTALLAZIONE	HOUSING LOWER PART GEHAEUSEUNTERTEIL CORPS INFERIEUR CORPO INFERIERE	VOLTAGE SPANNUNG VOLTAGE VOLTAGGIO	IDENTIFICATION BENENNUNG DENOMINATION DENOMINATIONE
6S 3M	446 105 530 2	446 105 012 4	24V = 446 105 031 0 12V = 446 105 041 0	
4S 3M	446 105 531 2		24V = 446 105 031 0 12V = 446 105 041 0	
4S 2M	446 105 532 2		24V = 446 105 031 0 12V = 446 105 041 0	
2S 2M +2S 1M (YE;BU)	446 105 533 2		24V = 446 105 031 0 12V = 446 105 041 0	
2S 1M (RD)	446 105 534 2		24V = 446 105 031 0 12V = 446 105 041 0	
	3	1 3	2	4

GENERAL SPECIFICATION: JED-334					
FURTHER TECHNICAL DATA:					
DOC. CODE:	SHEET:	TO			
GENERAL TOLERANCES					
CLASS 1)	RANGE OF NOMINAL DIMENSIONS (± mm) ≤50	>50 ≤180	>180 ≤400	>400	
FINE	0,5	1,0	1,5	2,0	
MEDIUM	1,0	2,0	3,0	4,0	± 3°
COARSE	2,0	3,5	5,0	6,5	
TAPPED HOLES ACC. ISO 4039 / JED-162					
1) TOLERANCE CLASS APPLIED CROSSMARKED					

DCN-NO.	REV.	DATE
061729	1× G	96-10-25
054579	1× F	94-11-01
054326	3× E	93-11-01
051393	1× D	93-04-15
049374	1× C	92-11-04
051318	1× B	92-09-02
049698	1× A	92-05-08

100mm

CADAM-DRAWING COPYRIGHT

DATE	SIGNATURE
DRAWN: 91-07-16	HIRT
CHECKED: 91-07-16	GUDAT
STANDARDIZATION: 91-07-16	PANTZER

WABCO

ABS-TRAILER-ELECTRONICS
ABS-ANHAENGER-ELEKTRONIK
ABS-REMORQUE-ELECTRONIQUE
ABS-RIMORCHIO-ELETTRICO

MASS	SCALE	PRODUCT IDENTIFICATION NO.	DOC. CODE	SHEET
1 KG	1:1	446 105 028 0	653	1/1
SIZE A 1	T.R.I. 142		SHAPE CODE	REPLACEMENT FOR

EXPERT CODE 7 2 5

PRODUCT TYPE 0 2 X

TOUTE COMMUNICATION OU REPRODUCTION DE CE DOCUMENT, TOUTE EXPLOITATION OU COMMUNICATION DE SON CONTENU NON E' PERMESSO CONSEGNARE A TERZI O RIPRODURRE QUESTO DOCUMENTO, NE UTILIZZARE IL CONTENUTO O RENDERLO COMUNQUE NOTO A TERZI, SALVO PREVISTA AUTORIZZAZIONE SCRITTA. TOUS DROITS DE PROPRIETE INTELLECTUELLE RESERVES. MITHAMPT EN WITSIG EINEREIN PE ERMITTELT PE MOULED ERSTELLT O WORDEN GEMACHT ZU DERFEN. DIESES DOKUMENT UND DIESES DOCUMENTO TIENEDOP. DERECHOS DE PROPIEDAD INTELECTUAL RESERVADOS. SUSCEPTIBLE DE MODIFICATION SANS PREAVIS. TOUTE UTILISATION ET TOUTE COMMUNICATION DE SON CONTENU SONT SOUMISES A L'AUTORISATION PREALABLE ECRITE. SOLO PER USO INTERNO. NON CONSENTITE LA COPIA, CESSIONE A TERZI O UTILIZZO DI QUESTO DOCUMENTO SENZA PREVIA AUTORIZZAZIONE SCRITTA. SUBJECT TO MODIFICATION WITHOUT NOTICE. ALL RIGHTS RESERVED. THIS DOCUMENT IS THE SUBJECT OF COPYRIGHT, GRANT OF PATENT OR REGISTRATION OF A UTILITY MODEL OR DESIGN. THIS DOCUMENT IS THE SUBJECT OF COPYRIGHT, GRANT OF PATENT OR REGISTRATION OF A UTILITY MODEL OR DESIGN.

1800/016/03/04.92
A08/1003