	MATERIAL	SURFACE PROTECTION
I	Al 99	
II	PBT GF20	
III	CuSn0.15	Sn
IV	Steel 20MnB4	Zn-Ni
V	ACRYLATE	
VI	X10CrNi18-8	

<CI> CUSTOMER INTERFACE | 0

****** SPRING DIAGRAM 2 SPRINGS

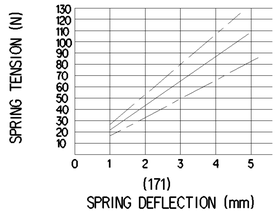

VOLTAGE:	20V...32V DC *
THERMAL RANGE OF APPLICATION:	-40° ... +75° C
NON-OPERATING TEMPERATURE:	-40° ... +90° C *
PROTECT TYPE:	IP 30 (IEC 529)
MAX. CURRENT TERMINAL 15:	2mA
MAX. CURRENT TERMINAL 30ab:	24A
INSTALLATION POSITION:	OPTIONAL
SOFTWARE VERSION:	SEE CCT

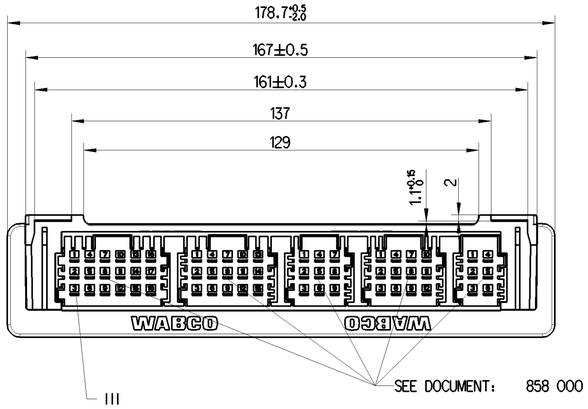

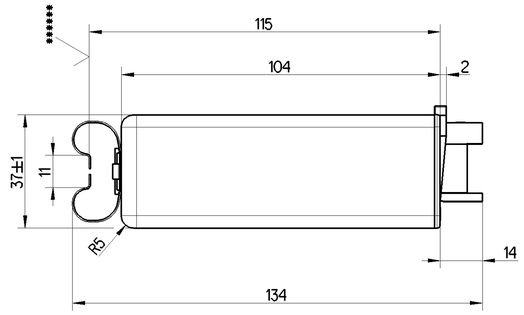

PLUG CONNECTIONS IN ACCORDANCE WITH MB DESIGN RULE A 940 000 97 99

LABELING INFORMATION

No	FIELD DESCRIPTION
1	DC-LOGO AND CUSTOMER NUMBER / ZGS
2	WABCO - 16 - JED369
3	PRI
4	DATE OF MANUFACTURE (JED-226) week / year
5	SERIAL NUMBER
6	CERTIFICATION NUMBER
7	WABCO IDENTIFICATION NUMBER
8	DEVICE IDENTIFICATION NAME
9	BARCODE ACC. TO ISO/IEC16390 INTERLEAVE 2 OF 5, WITHOUT CHECK DIGIT POS. 1-4: BARCODE HEADER POS. 5-10: SERIAL NUMBER
10	EMC HOMOLOGATION MARK
11	COUNTRY OF ORIGIN
12	
13	
	NOTE FOR 1-13: REFER TO CCT FOR DETAILS

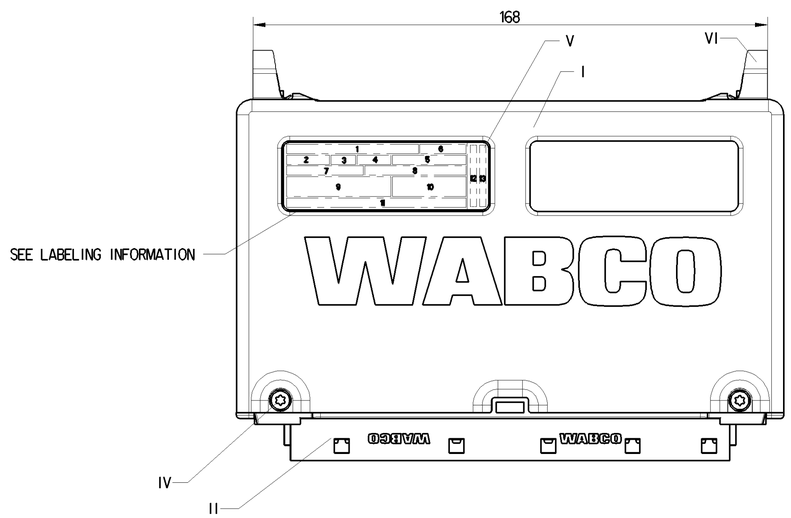

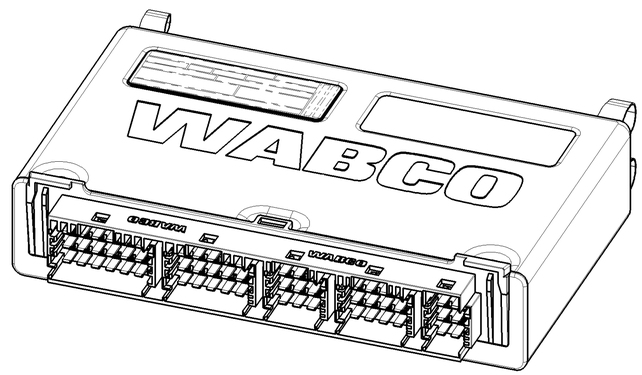

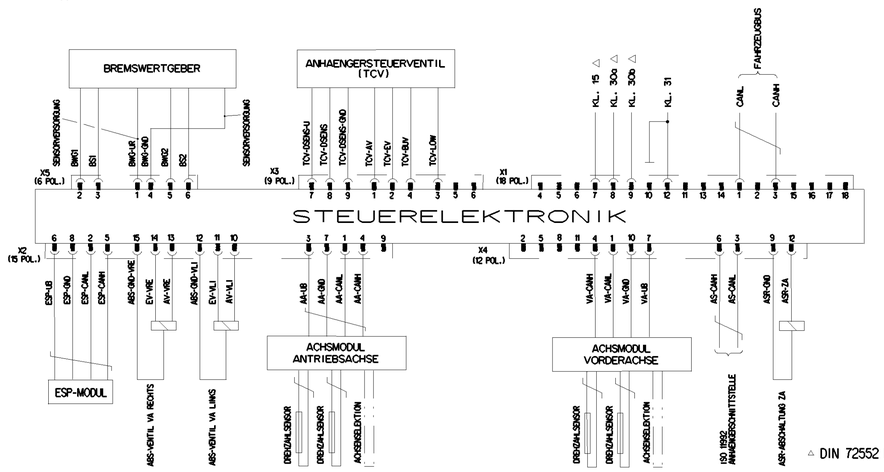

General Specification: ISO 8015, JED-334-1, Size ISO 14405 LP						
Further Technical Data:						
Doc. Code:			Sheet:	To		
General Tolerances JED-261						
		Range of nominal dimensions in mm				
Class 1)		≤ 50	> 50 ≤ 180	> 180 ≤ 400	> 400	∢
Fine		±0.5	±1	±1.5	±2	
Medium	X	±1	±2	±3	±4	±3°
Coarse		±2	±3.5	±5	±6.5	
Tapped Holes acc. -						
1) Tolerance Class Applied Crossmarked						

Copyright WABCO®

Date	Signature
Drawn 2023-01-04	Sobola
Checked 2023-02-03	Hechl

Dimensions in mm

WABCO

ECU-EBS4+PAKET 2020

Mass	Scale	Material No.	Date of first issue: 2020-01-30		
0.37 kg	1:1	446 130 223 0	Doc.Code 005	Language EN	Sheet 1/1
Size A 1	CAD System CREO				

ECN-No.	Revision	Techn. Resp.	Replacement for
509641	2x B	6830	

100mm

Toute Communication ou reproduction de ce document, toute exploitation ou communication de son contenu sont interdites, sauf autorisation écrite préalable. Ce document s'adresse exclusivement au destinataire indiqué et n'engage pas la responsabilité de WABCO. Tous droits de propriété industrielle réservés, notamment en matière de brevets et de modèles.

Weitergabe sowie Vervielfältigung dieser Unterlage, Verwertung und Mitteilung ihres Inhalts nicht gestattet, soweit nicht ausdrücklich zugesichert. Dieses Dokument ist ausschließlich für den angegebenen Empfänger bestimmt. Alle Rechte für den Fall der Patenterteilung oder Gebrauchsmustereintragung vorbehalten.

Vietato il permesso consegnare a terzi o riprodurre questo documento, nè utilizzarne il contenuto o renderlo comunque noto a terzi senza esplicita autorizzazione. Questo documento è riservato al destinatario qui indicato. WABCO non si assume alcuna responsabilità. Diritti di proprietà industriale riservati, soprattutto in materia di brevetti e di modelli.

Copying of this document and giving it to others and the use or communication of the contents thereof, are forbidden without express authority. Offenders are liable to the payment of damages. All rights are reserved in the event of the grant of patent or registration of a utility model or design. This document is the subject of copyright.