A	ZINC COATED STEEL	JED-585-2
B	ABS	JED-465-5
C	PBT GF20	JED-375-1
D	TIN-PLATED COPPER	JED-570-545
E	POLYESTER	

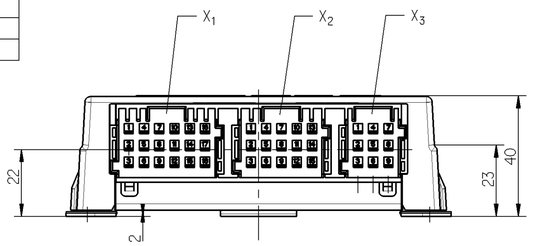

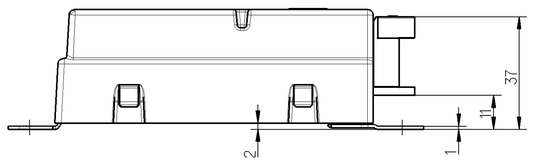

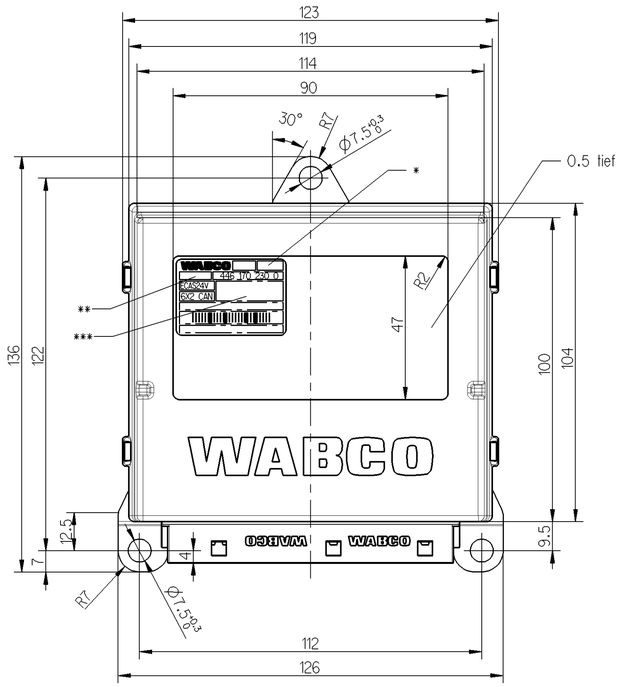

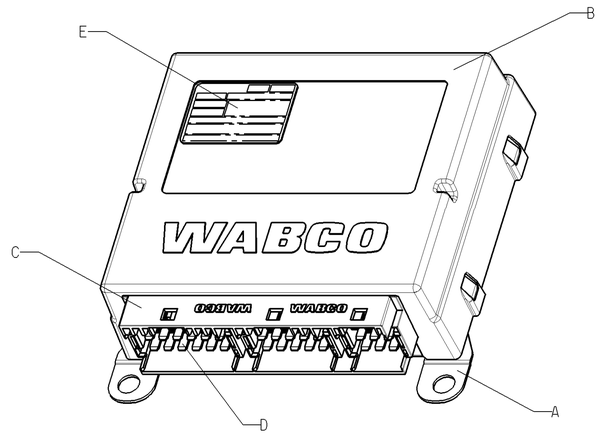

DATE OF MANUFACTURE:
* HERSTELLDATUM: JED-226
DATE DE FABRICATION:
DATA DI FABRICAZIONE:

SERIAL NUMBER GREATER THAN:
** FORTSCHRITTZAHL GROESSER ALS: 0
NUMERO DE SERIE PLUS GRAND QUE:
NUMERO DI SERIE PIU GRANDE DI:

INSPECTION MARK:
*** PRUEFZEICHEN: (E1) 10R-032063
MARQUE DE CONTROLE:
STAMPA DI COLLAUDO:

VOLTAGE:
SPANNUNG: 22 V ... 32 V DC
TENSION:
TENSIONE:

THERMAL RANGE OF APPLICATION:
THERMISCHER ANWENDUNGSBEREICH: -40 °C ... +75 °C
GAMME D'APPLICATION THERMIQUE:
CAMPO TERMICO D'APPLICAZIONE:

STORAGE TEMPERATURE:
LAGERTEMPERATUR: -40 °C ... +90 °C
TEMPERATURE DE STOCKAGE:
TEMPERATURA DI IMMAGAZZINAMENTO:

DEGREE OF PROTECTION:
SCHUTZART: IP 30 (IEC 529)
DEGRE DE PROTECTION:
GRADO DI PROTEZIONE:

FURTHER TECHNICAL DATA SEE PRODUCT SPECIFICATION:
WEITERE TECHNISCHE DATEN SIEHE PRODUKTSPEZIFIKATION
(INDEX BEACHTEN): 446 170 230 0 (DOC. CODE 035)
POUR AUTRES DONNEES TECHNIQUES VOIR SPECIFICATION DU PRODUIT:
PER ULTERIORI DATI TECNICI VEDERE SPECIFICA DI PRODOTTO:

FINISHING VARNISH ON THE PRINTED BOARD:
UEBERZUGSLACK AUF DER LEITERPLATTE: JED-543
VERNIS ENDUIT SUR CARTE IMPRIMEE:
VERNICE DI RIVESTIMENTO SULLA PIASTRA STAMPTA:

INSTALLATION POSITION:
EINBAULAGE:
POSITION D'INSTALLATION:
POSIZIONE DI MONTAGGIO:

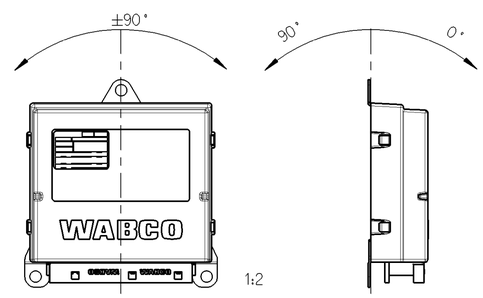

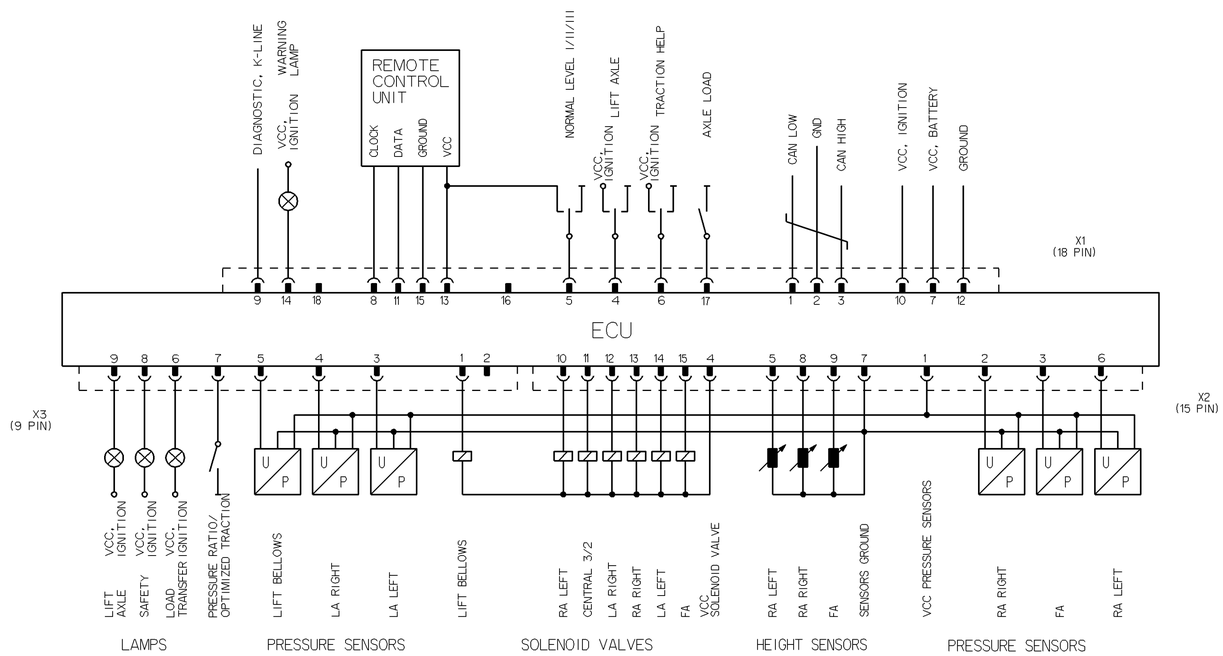

General Specification:	JED-334-0				
Further Technical Data:					
Doc. Code:		Sheet:		To	
General Tolerances JED-261					
Class 1)	Range of Nominal Dimensions (± mm) ≤ 50	> 50 ≤ 180	> 180 ≤ 400	> 400	
Fine	0.5	1.0	1.5	2.0	±3°
Medium X	1.0	2.0	3.0	4.0	
Coarse	2.0	3.5	5.0	6.5	
Topped Holes acc.					
1) Tolerance Class Applied Crossmarked					

Copyright WABCO®

Date	Signature
Drawn 2013-02-22	Slowinski
Checked 2013-02-22	Jovers
Expert JOVERS	

WABCO

ELECTRONIC
ELEKTRONIK ECAS 6x2 CAN
ELECTRONIQUE
ELETTRONICA

Mass	Scale	Material No.	Date of first issue: 2013-02-22		
0.280 KG	1:1 (1:2)	446 170 230 0	Doc.Code 005	Language ML	Sheet 1/1
Size A 1	CAD System Pro/E		ECN-No. -	Revision -	Techn. Resp. 6650
			Replacement for 446 170 212 0		

100mm

Tous Communication ou reproduction de ce document, toute exploitation ou communication de son contenu sont interdites, sauf accord exprès. Tout manquement à cette règle constitue un délit, ouvrant le droit à un dommage et expose son auteur au versement de dommages et intérêts. Tous droits de propriété intellectuelle, brevet et modèle inclus.

Weitergabe sowie Vervielfältigung dieser Unterlage, Verwertung und Mitteilung ihres Inhalts nicht gestattet, soweit gesetzlich zulässig. Zuwiderhandlungen verpflichten zu Schadensersatz. Alle Rechte für den Fall der Patenterteilung oder Gebrauchsmustereintragung vorbehalten.

Non è permesso consegnare o terzi o riprodurre questo documento, né utilizzarne il contenuto o renderlo comunque noto a terzi prima dell'ottenuta autorizzazione scritta. Qualsiasi violazione comporta un'azione di danni. Tutti i diritti di proprietà intellectuale, brevetto e modello inclusi.

Copying of this document and giving it to others and the use or communication of the contents thereof, are forbidden without express authority. Contravention of this rendition will constitute an incident clause and result in a liability to the payment of damages. All rights are reserved in the event of the grant of a patent, registration of a utility model or design. This document is the property of WABCO.