MATERIAL MATERIAU MATERIAL MATERIALE		
I	PA66 GF5 GB35	70%JED-753-1 30%JED-688-1
	SEALING JOINT DICHTUNG GUARNIZIONE PU	JED-637-2
II	CuZn38 Pb1.5	JED-570-84
III	AlCu4PbMg	JED-623
IV	PA66 GF35	JED-359-1

<1>	SAFETY CHARACTERISTICS	O
<2>	SIGNIFICANT CHARACTERISTICS	O

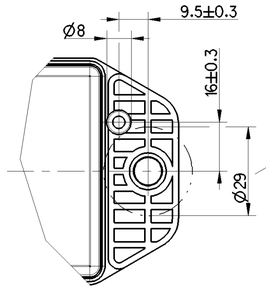

FREE SPACE FOR SCREW
FREIRAUM FUER VERSCHRAUBUNG
ESPACE LIBRE POUR RACCORD FILETE
SPAZIO LIBERO PER RACCORDO FILETTATO

TORQUE:
ANZUGSMOMENT: 15 Nm ± 10%
COUPLE DE SERRAGE:
COPPIA DI SERRAGGIO:

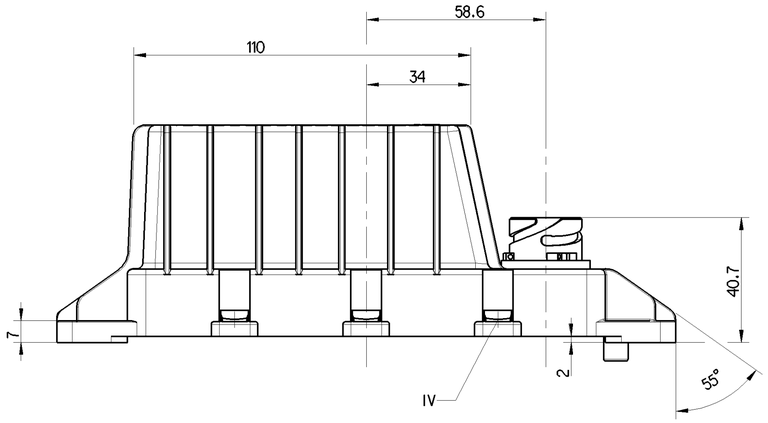

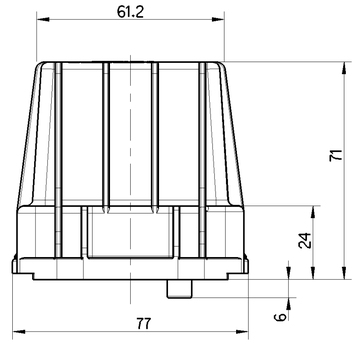

THERMAL RANGE OF APPLICATION:
THERMISCHER ANWENDUNGSBEREICH: -40°C...+80°C
GAMME D'APPLICATION THERMIQUE:
CAMPO TERMICO D'APPLICAZIONE:

NON-OPERATING TEMPERATURE:
TEMPERATUR AUSSER BETRIEB: -40°C...+85°C *
TEMPERATURE HORS FONCTIONNEMENT: MAX. 100°C FOR 2h
TEMPERATURA FUORI ESERCIZIO:

DEVICE SHALL BE OPENED BY MANUFACTURER ONLY
GERAET DARF NUR VOM HERSTELLER GEOEFFNET WERDEN
L'APPAREIL NE DOIT ETRE OUVERT QUE PAR LE FABRICANT
IL APPARECCHIO DEVE ESSERE APERTO PER IL PRODUTTORE SOLAMENTE

NOTE: PLEASE DO NOT TOUCH THE MALE MULTIPOINT CONNECTOR CONTACTS
HINWEIS: KONTAKTSTIFTE BITTE NICHT BERUEHREN
NOTE: S.V.P. NE PAS TOUCHER LES CONTACTS DU CONNECTEUR MALE MULTIBROCHE
NOTA: PER FAVORE NON TOCCARE I CONTATTI DEL CONNETTORE MASCHIO MULTIPLO

(5) COUNTRY OF ORIGIN:
URSPRUNGSLAND: JED-225
PAYS D'ORIGINE:
PAESE D'ORIGINE:

(6) INSPECTION MARK:
PRUEFZEICHEN: FCC-ID: SA4-ECU220
MARQUE DE CONTROLE: IC: 6970A-ECU220
STAMPA DI COLLAUDO:

(7) FCC NOTICE: THIS DEVICE COMPLIES WITH PART 15 OF THE FCC RULES.
OPERATION IS SUBJECT TO THE FOLLOWING TWO CONDITIONS:
(1) THIS DEVICE MAY NOT CAUSE HARMFUL INTERFERENCE,
AND
(2) THIS DEVICE MUST ACCEPT ANY INTERFERENCE RECEIVED,
INCLUDING INTERFERENCE THAT MAY CAUSE UNDESIRED OPERATION.

(8) CE-SIGN, according EC REGULATION 765/2008
CE-Logo, GEMAESS EC REGULATION 765/2008
CE-SIGNE, selon EC REGULATION 765/2008
CE-SEGNO, secondo EC REGULATION 765/2008

VOLTAGE:
SPANNUNG: 8V ... 32V (TYP. 24V) DC
VOLTAGE:
VOLTAGGIO:

DEGREE OF PROTECTION PROVIDED BY ENCLOSURE:
COMPLETE DEVICE WITH MOUNTED CONNECTOR SOCKET:
SCHUTZART: IP6K6, IP6K7, IP6K9K
KOMPLETTES GERAET MIT MONTIERTER STECKVERBINDUNG: ISO20653 *
MODE DE PROTECTION:
APPAREIL COMPLET AVEC L'ACCOUPPLEMENT:
MODO DI PROTEZIONE:
APPARECHIO COMPLETO CON ACCOPPIAMENTO MONTATO:

PRODUCTION PLACE:
(1) PRODUKTIONSSTAETTE: JED-225
LIEU DE FABRICATION:
LUOGO DI FABBRICAZIONE:

DATE OF MANUFACTURE: WEEK WEEK / YEAR YEAR
(2) HERSTELLDATUM: JED-226 WOCHE WOCHE / JAHR JAHR
DATE DE FABRICATION:
DATA DI FABBRICAZIONE:

SERIAL NUMBER:
(3) FORTSCHRITTZAHL:
NUMERO DE SERIE:
NUMERO DI SERIE:

INSPECTION MARK:
(4) PRUEFZEICHEN: (E1) 10R - 047517
MARQUE DE CONTROLE:
STAMPA DI COLLAUDO:

INSTALLATION POSITION:
EINBAULAGE:
POSITION D'INSTALLATION:
POSIZIONE DI MONTAGGIO:

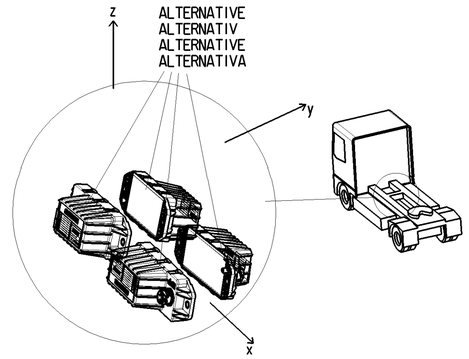

ALTERNATIVE
ALTERNATIV
ALTERNATIVE
ALTERNATIVA

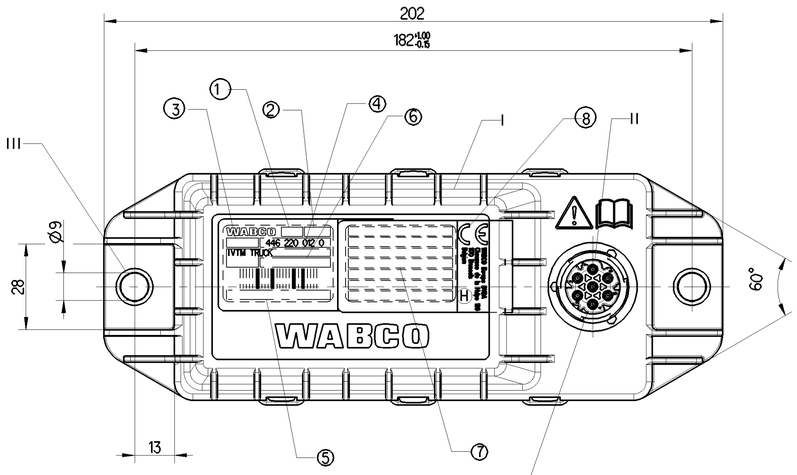

RECOMMENDED SOCKET
EMPFOHLENE GERAETESTECKDOSE 894 101 723 2
PRISE DE COURANT RECOMMANDEE
PRESA DI CORRENTE RECOMMANDATA

THIS DEVICE CONTAINS A 434 MHz RADIO TRANSMITTER AND RECEIVER AND MATCHING INTEGRATED PCB ANTENNA:
IT MUST NOT BE MOUNTED DIRECTLY ON A METAL SURFACE:
A CUT-OUT AREA (MIN.65mmx145mm,CENTERED ON ECU)
IN THE MOUNTING BRACKET IS RECOMMENDED

PROPOSED MOUNTING BRACKET
WABCO PARTNO. 960 901 050 4 OR SIMILAR

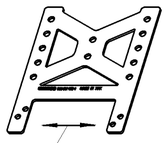

CUT-OUT AREA FOR RF ANTENNA CENTERED ON ECU

INSTALLATION POSITION TO BE DEFINED ACCORDING TO VEHICLE TYPE
FAHRZEUGANBAUORT FAHRZEUGTYPSPEZIFISCH FESTZULEGEN
POSITION D'INSTALLATION DOIT ETRE DEFINIE SUIVANT TYPE DE VEHICULE
POSITIONE DI MONTAGGIO DEVE ESSERE DETERMINATA SECONDO TIPO VEICOLO

FURTHER TECHNICAL DATA SEE PRODUCT SPECIFICATION
* WEITERE TECHNISCHE DATEN SIEHE PRODUKTSPEZIFIKATION (DOC. CODE 035)
POUR AUTRES DONNEES TECHNIQUES VOIR SPECIFICATION DU PRODUIT
PER ULTERIORI DATI TECNICI VEDERE SPECIFICA DI PRODOTTO

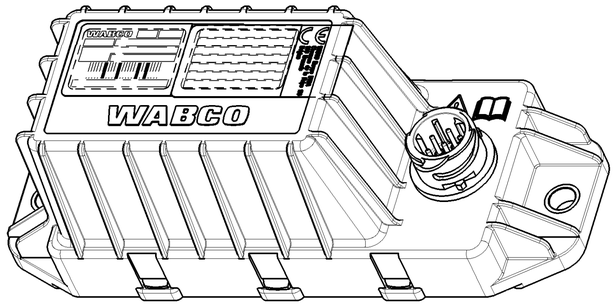

PORT ANSCHLUSS	PORT ATTACCO	FUNCTION FUNKTION	FUNCTION FUNZIONE
1		CAN LOW CAN LOW	CAN LOW CAN LOW
2		IN/OUT 2 * IN/OUT 2 *	IN/OUT 2 * IN/OUT 2 *
3		GROUND MASSE	MASSE MASSA
4		IN/OUT 1 * IN/OUT 1 *	IN/OUT 1 * IN/OUT 1 *
5		IGNITION ZUENDUNG	ALLUMAGE ACCENSIONE
6		CAN HIGH CAN HIGH	CAN HIGH CAN HIGH
7		UB UB	UB UB

Toute Communication ou reproduction de ce document, toute exploitation ou communication de son contenu sont interdites, sauf autorisation écrite. Tous droits de propriété industrielle réservés, notamment en matière de brevets et de modèles.

Weitergabe sowie Vervielfältigung dieser Unterlage, Verwertung und Mitteilung ihres Inhalts sind gestattet, soweit nicht ausdrücklich untersagt. Gewerbliche Schutzrechte vorbehalten, insbesondere Patent- und Gebrauchsmusterrechte.

Non è permesso consegnare a terzi o riprodurre questo documento, né utilizzare il contenuto o renderlo comunque noto a terzi senza esplicita autorizzazione. Ogni diritto di proprietà industriale è riservato, in particolare quello di brevetto o modello.

Copying of this document and giving it to others and the use or communication of the contents thereof, are forbidden without express authority. Offenders are liable to the payment of damages. All rights are reserved in the event of the grant of patent or registration of a utility model or design. This document is the subject of copyright.

General Specification: JED-334-1 , Size ISO 14405 LP							
Further Technical Data:							
Doc. Code:			Sheet:		To		
General Tolerances JED-261							
Class 1)	Range of Nominal Dimensions (± mm)						
	≤ 50	> 50 ≤ 180	> 180 ≤ 400	> 400			
Fine		0.5	1.0	1.5	2.0		
Medium	X	1.0	2.0	3.0	4.0	±3°	
Coarse		2.0	3.5	5.0	6.5		
Tapped Holes acc.							
1) Tolerance Class Applied Crossmarked							

Copyright WABCO®

Date	Signature
Drawn	
2017-12-11	Golembiewski
Checked	
2017-12-19	Cornelius
Expert	
Belczacka	

WABCO

ECU IVTM RETROFIT TRUCK
ECU IVTM RETROFIT TRUCK
ECU IVTM RETROFIT TRUCK
ECU IVTM RETROFIT TRUCK

Mass	Scale	Material No.	Date of first issue: -		
0.320 kg	1:1	446 220 012 0	Doc.Code	Language	Sheet
			005	ML	1/1
Size	CAD System				
A 1	CREO				

ECN-No.	Revision	Techn. Resp.	Replacement for
174779	1 H	6031	894 907 678 0

100mm