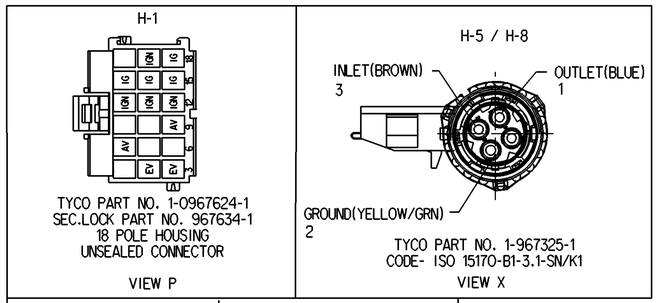

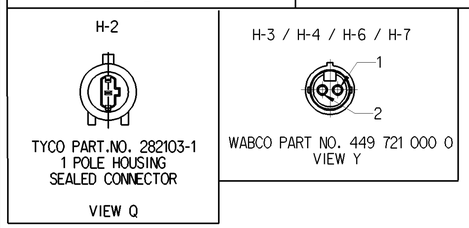

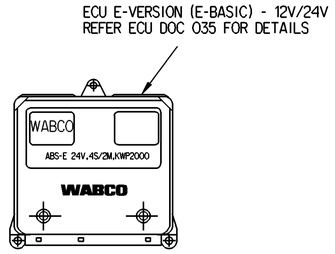

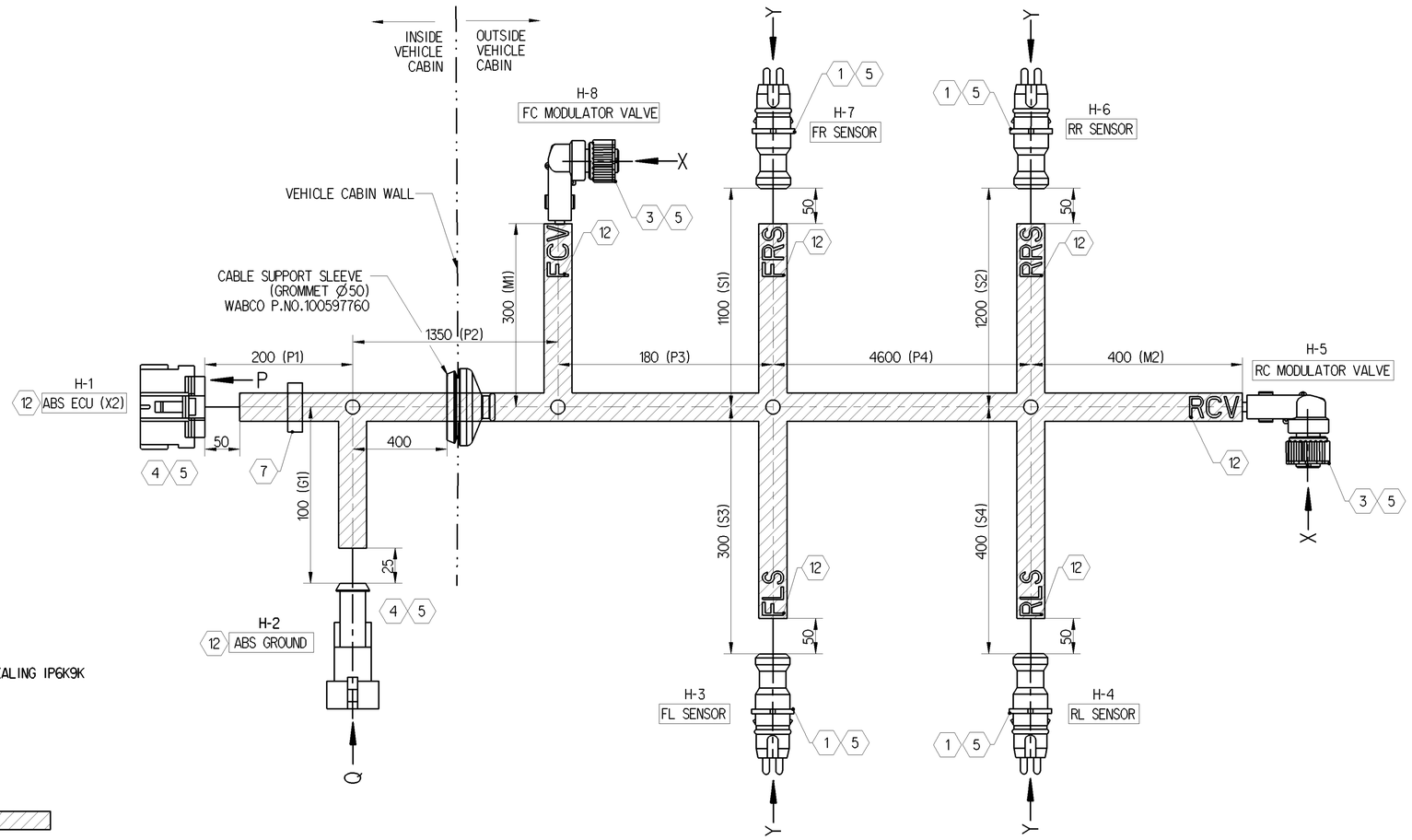

NOTES:
OPERATING VOLTAGE : 08-32 V DC
OPERATING TEMPERATURE : -40 TO +85° C

1. TWO CORE TWISTED CABLES OF ~35mm/TWIST SENSOR CABLES. MATED TO WABCO WHEEL SPEED SENSOR,TOGETHER SEALING IP6K9K
   NO POLARITY FOR WHEEL SPEED SENSOR CABLE COLORS OR CONNECTORS
2. MODULATOR VALVE CABLES. MATED TO WABCO MODULATOR VALVE,TOGETHER SEALING IP6K9K
3. SEE VIEW FOR MODULATOR VALVE CONNECTOR CONTACT POSITIONS.CONNECTOR AS PER ISO 15170
4. CUSTOMER MATING CONNECTORS TO MEET THE MANUFACTURERS INTERFACE DIMENSIONS
5. FOR CONNECTORS AND CONTACTS MANUFACTURERS PRODUCT SPECIFICATION IS VALID
6. ALL YELLOW/GREEN WIRES FROM THE MODULATOR VALVE CABLES SHALL BE SPLICE JOINTED AND CONNECTED.
7. (A) INDELIBLE IDENTIFICATION TAG / PRINTED STICKER INDICATING CUSTOMER PART NUMBER AND VEHICLE MODEL
   SHALL BE PROVIDED AS PER LOCATION SHOWN. CONTENTS OF THE LABEL AS PER DEVICE DOC.922
8. ALL THE CABLES SHALL BE COVERED WITH FIRE RETARDANT SLIT TYPE CORRUGATED TUBES (PPFR) OF BLACK COLOR
9. FURTHER TECHNICAL DATA AS PER THE PRODUCT SPECIFICATION 449 011 000 0 (DOC 035)
10. FOR INSTALLATION RESTRICTIONS PLEASE REFER 449 000 000 0 (DOC 11)
    THE POWER SUPPLY LINES TO BE FUSED IN ACCORDANCE TO ISO/DIS 8820
    CABLE DESIGN AND INSTALLATION HAS TO BE CARRIED OUT THAT NO ELECTROMAGNETIC INTERFERENCE OCCURS
    HOT AIR TO BE DIVERTED AWAY FROM WIRING HARNESS SUITABLY
11. SPLIT JOINTS- BLACK COLOR PVC INSULATION TAPES SHALL BE USED AT JOINTS
    DO 2-3 TURNS OF POINT TAPING ON SLIT PORTION OF CORRUGATED TUBE FOR EVERY DISTANCE OF 200MM
12. IDENTIFICATION TAG / PRINTED STICKER TO BE PROVIDED ON ALL END OF BRANCHES.
13. ALL WIRES TO MEET ISO 6722:2006 (CLASS A) & FLAMMABILITY REQUIREMENTS TO MEET ISO 6722:2006
14. COT TUBE TO MEET FLAMMABILITY REQUIREMENT AS PER UL94,V-2

(12)

INDENTIFICATION TAGS (INDELIBLE)						
SE/MV	SENSOR EXTENSION (SE) CABLE				MODULATOR VALVE (MV) CABLE	
LOCATION	FRONT LEFT	FRONT RIGHT	REAR LEFT	REAR RIGHT	FRONT COMMON	REAR COMMON
ID TAG	FL-S	FR-S	RL-S	RR-S	FC-V	RC-V

CIRCUIT TABLE									
S NO	COLOR	WIRE CSA SQ. MM	FROM		TO		FUNCTION	REMARKS	
			CONNECTOR	PIN	CONNECTOR	PIN			
1	BROWN	0.75	ABS ECU (X2)	13	FRS	1	SENSOR CABLE	FRS	1
2	BLACK	0.75	ABS ECU (X2)	10	FRS	2	SENSOR CABLE	FRS	1
3	BROWN	0.75	ABS ECU (X2)	15	FLS	1	SENSOR CABLE	FLS	1
4	BLACK	0.75	ABS ECU (X2)	12	FLS	2	SENSOR CABLE	FLS	1
5	BROWN	0.75	ABS ECU (X2)	18	RRS	1	SENSOR CABLE	RRS	1
6	BLACK	0.75	ABS ECU (X2)	17	RRS	2	SENSOR CABLE	RRS	1
7	BROWN	0.75	ABS ECU (X2)	14	RLS	1	SENSOR CABLE	RLS	1
8	BLACK	0.75	ABS ECU (X2)	11	RLS	2	SENSOR CABLE	RLS	1
9	BLUE	1	ABS ECU (X2)	4	FCV	1	MV OUTLET	FCV	
10	BROWN	1	ABS ECU (X2)	3	FCV	3	MV INLET	FCV	
11	BLUE	1	ABS ECU (X2)	9	RCV	1	MV OUTLET	RCV	
12	BROWN	1	ABS ECU (X2)	2	RCV	3	MV INLET	RCV	
13	BLACK	2.5	MJ01	-	ABS GROUND	1	SYSTEM GROUND	GROUND	
14	YEL/GRN	1	MJ01	-	FCV	2	MV GROUND	GROUND	
15	YEL/GRN	1	MJ01	-	RCV	2	MV GROUND	GROUND	

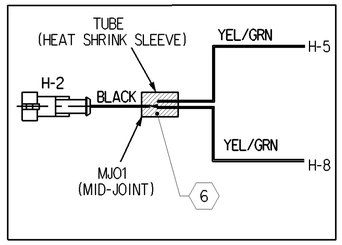

VEHICLE MODEL	CUSTOMER PART NO.
ABS WH T32	7905DAC00661N

(A)

(8)

CORRUGATED TUBE DETAILS	
OD SIZE/COLOUR	LENGTH(S)
Ø20/BLACK	P1, P2, P3
Ø16/BLACK	P4
Ø10/BLACK	S1, S2, S3, S4, M1, M2, G1

BRANCH TOLERANCES	
UPTO 500	+30/-0
UPTO 2000	+50/-0
UPTO 5000	+60/-0
ABOVE 5000	+75/-0

General Specification: JED-334-1
Further Technical Data: 449 011 000 0
Doc. Code: 035 Sheet: 01 To: 09
General Tolerances JED-261

Range of Nominal Dimensions (± mm)					
Class 1)	≤ 50	> 50 ≤ 180	> 180 ≤ 400	> 400	∢
Fine	0.5	1.0	1.5	2.0	
Medium	1.0	2.0	3.0	4.0	±3°
Coarse	2.0	3.5	5.0	6.5	

Topped Holes acc. .
1) Tolerance Class Applied Crossmarked

Copyright WABCO®

	Date	Signature
Drawn	2016-01-06	Ashokkumar
Checked	2016-01-06	Sujith
Expert	Senthilmurugan	

WABCO

WIRING HARNESS ABS - 4S/2M FRAME

Mass	Scale	Material No.	Date of first issue: 2015-09-10		
/ KG	NTS	447 100 219 0	Doc.Code	Language	Sheet
Size	CAD System		005	EN	1/1
A 1	CREO	ECN-No. 169193 / Revision 2 A / Techn. Resp. 6391_WIN	Replacement for -		

100mm

Tutti i diritti riservati. Non è permesso consegnare a terzi o riprodurre questo documento, né utilizzare il contenuto o renderlo comunque noto a terzi senza previo consenso della proprietà intellettuale. Contravvenendo a quanto sopra si è tenuti al risarcimento del danno. È fatta riserva di tutti i diritti derivanti da brevetti o modelli.

Copyright of this document and giving it to others and the use or communication of the contents thereof, are forbidden without express authority. Offenders are liable to the payment of damages. All rights are reserved in the event of the grant of patent or registration of a utility model or design. This document is the subject of copyright.

Toute Communication ou reproduction de ce document, toute exploitation ou communication de son contenu sont interdites, sauf autorisation écrite. Tous droits de propriété intellectuelle réservés, notamment en matière de brevets et de modèles.

Weitergabe sowie Vervielfältigung dieser Unterlage, Verwertung und Mitteilung ihres Inhalts nicht gestattet, soweit nicht durch schriftliche Einzelvereinbarung ausdrücklich zugesichert. Zuwiderhandlungen verpflichten zu Schadensersatz. Alle Rechte für den Fall der Patent- oder Gebrauchsmustereintragung vorbehalten.