<1> SAFETY CHARACTERISTICS	0
<2> SIGNIFICANT CHARACTERISTICS	0
<CI> CUSTOMER INTERFACE	0

RESISTANT TO : AIR, WATER, MINERAL OIL, PETROL, DIESELOIL, SALTSPRAY
BESTAENDING GEGEN : LUFT, WASSER, MINERALOEL, BENZIN, DIESELOEL, SALZSPRUENHEBEL
RESISTANT A : AIR, EAU, HUILE MINERALE, ESSENCE, GASOIL, BROUILLARD SALIN
RESISTENTE A : ARIA, AQUA, OLIO, MINERALE, BENZINA, GASOLIO, NEBBIA SALINA

TYPE OF PROTECTION (IN CONNECTION WITH PLUG) :
SCHUTZART (IN VERBINDUNG MIT STECKER) : **A:** IP 6K7 / IP 6K 9K
MODE DE PROTECTION (DANS CONNECTION AVEC FICHE) : **B:** IP 54
TIPO DI PROTEZIONE (IN RELAZIONE CON SPINA) :

THERMAL RANGE OF APPLICATION :
THERMISCHER ANWENDUNGSBEREICH : -40°C...+80°C
GAMME D'APPLICATTION THERMIQUE :
CAMPO DI APPLICAZIONE TERMICA :

5-CORE CABLE :
LEITUNG 5-ADRIG : PUR
CABLE A 5-CONDUCTERUS : 2x4mm² +3x1.5mm²
CAVO A 5-CONDUTTORI :

(1) SURFACE PROTECTION :
OBERFLAECHENSCHUTZ : Sn
PROTECTION DE SURFACE :
PROTEZTIONE SUPERFICI :

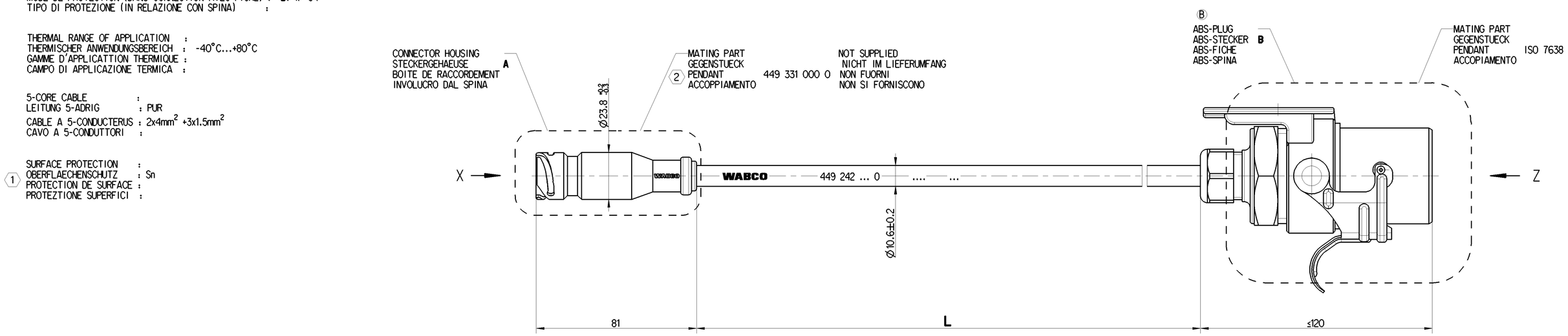

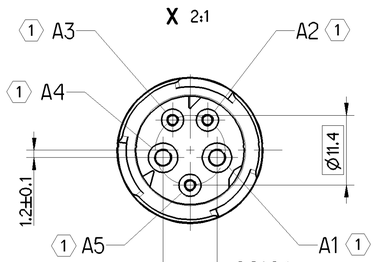

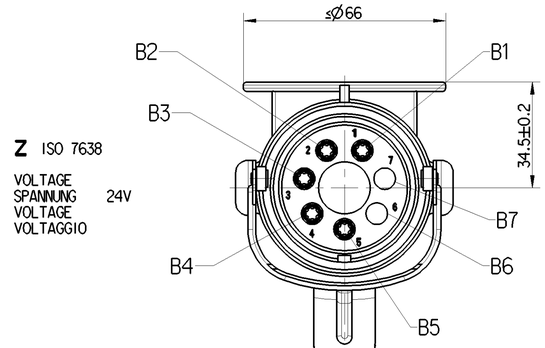

CHAMBER IN : KAMMER IN : A CHAMBRE EN : CAMERA IN :	CROSS SECTION QUERSCHNITT SECTION DETRANSVERSALE SEZIONE TRANSVERSAL	CHAMBER IN : KAMMER IN : B CHAMBRE EN : CAMERA IN :
A1	4.0mm²	B1
A2	1.5mm²	B2
A3	1.5mm²	B3
A4	4.0mm²	B4
A5	1.5mm²	B5

CODE OF LENGTH LAENGENCODIERUNG CODE DE LA LONGUEUR CODICE DEL LUNGHEZZA	
PART NO TEILE NR. NO DE PIECE CODICE	L[m] 449 242 □□,□ 0
EXAMPLE BEISPIEL EXEMPLE ESEMPIO	L = 10 m 449 242 100 0
MIN/MAX LENGTH MIN/MAX LAENGE MIN/MAX LONGUEUR MIN/MAX LUNGHEZZA	L_{min} = 0.1m L_{max} = 20m
TOLERANCES TOLERANZEN TOLERANCES TOLERANZA	L ≤ 10m +0.100 -0.050 L > 10m +0.05 -0.05

General Specification: JED-334-1 , Size ISO 14405 LP					
Further Technical Data:					
Doc. Code:		Sheet:		To	
General Tolerances JED-261					
	Range of Nominal Dimensions (± mm)				
Class 1)	≤ 50	> 50 ≤ 180	> 180 ≤ 400	> 400	∢
Fine	0.5	1.0	1.5	2.0	±3°
Medium X	1.0	2.0	3.0	4.0	
Coarse	2.0	3.5	5.0	6.5	
Tapped Holes acc.					
1) Tolerance Class Applied Crossmarked					

Copyright WABCO®

Date	Signature
Drawn 2019-08-30	Rokucki
Checked 2019-08-30	Drosner
Expert Overhage	

Mass	Scale	Material No.	Date of first issue: 2019-08-30		
/ KG	1:1 2:1	449 242 000 0	Doc.-Code 053	Language ML	Sheet 1/1
Size A 1	CAD System CREO	ECN-No. 501944	Revision 1x B	Techn. Resp. 6390_EM	Replacement for

WABCO

CABLE WITH ABS-PLUG
KABEL MIT ABS-STECKER
CABLE AVEC ABS-FICHE
CAVO CON ABS-SPINA

100mm

Toute Communication ou reproduction de ce document, toute exploitation ou communication de son contenu sont interdites, sauf autorisation écrite. Tous droits de propriété intellectuelle réservés, notamment en matière de brevets et de modèles.

Weitergabe sowie Vervielfältigung dieser Unterlage, Verwertung und Mitteilung ihres Inhalts nicht gestattet, soweit nicht ausdrücklich bestätigt. Zuwiderhandlungen verpflichten zu Schadenersatz. Alle Rechte für den Fall der Patent-, Gebrauchsmuster- oder Geschmacksmustereintragung vorbehalten.

Non è permesso consegnare o fare a chiunque altro copie di questo documento, né utilizzare il contenuto o renderlo comunque noto a terzi senza autorizzazione scritta. Tutti i diritti derivanti da brevetti o modelli.

Copying of this document and giving it to others and the use or communication of the contents thereof, are forbidden without express authority. Offenders are liable to the payment of damages. All rights are reserved in the event of the grant of patent or registration of a utility model or design. This document is the subject of copyright.

Erw. 449 000 ... 053 / Version 5 / date Approval / 2019-08-30 ... A02