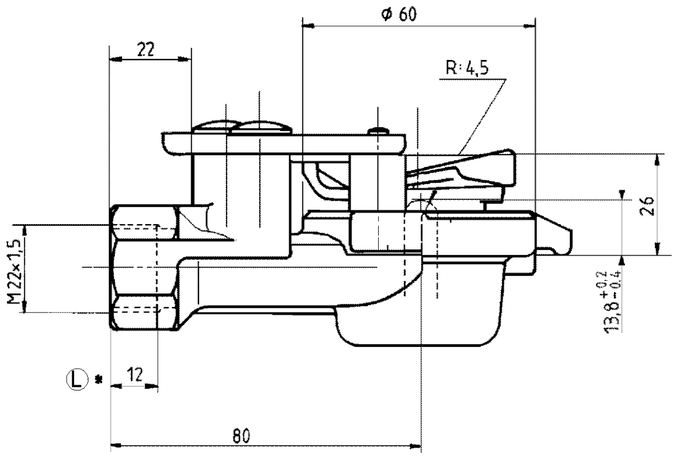

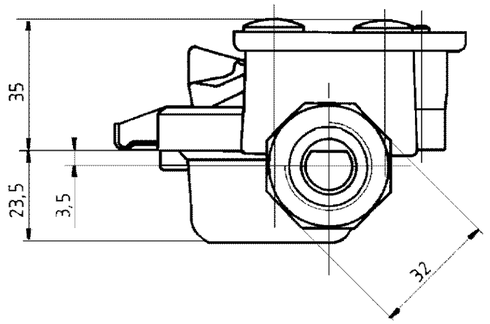

SYMBOL SYMBOL SYMBOLE SIMBOLO — DIN ISO 1219	
WORKING POSITION EINBAULAGE POSITION DE FONCTIONNEMENT POSIZIONE DE FUNZIONAMENTO	UNIMPORTANT BELIEBIG INDIFFERENTE INDIFFERENTE
WORKING MEDIUM ARBEITSMEDIUM FLUIDE D'UTILISATION FLUIDO DI ESERCIZIO	COMPRESSED AIR DRUCKLUFT AIR COMPRIME ARIA COMPRESSA
AMBIENT MEDIUM UMGEBUNGSMEDIUM FLUIDE AMBIANT FLUIDO AMBIENTE	AIR (CONTAINING WATER DUST AND OIL) LUFT (WASSER-, STAUB- UND OELHALTIG) AIR (HUMIDE, HUILEUX POUSSIEREUX) ARIA (ACQUA, POLVERE ED OLIO INQUINATO)
WORKING TEMPERATURE THERMISCHER ARBEITSBEREICH TEMPERETURE DE FONCTIONNEMENT TEMPERATURA DI UTILIZZAZIONE	-40°+80°C
MAX INLET PRESSURE MAX BETRIEDSDRUCK PRESSION D'ALIMENTATION MAXI PRESSIONE MASSIMA D'ALIMENTAZIONE	8.5 BAR

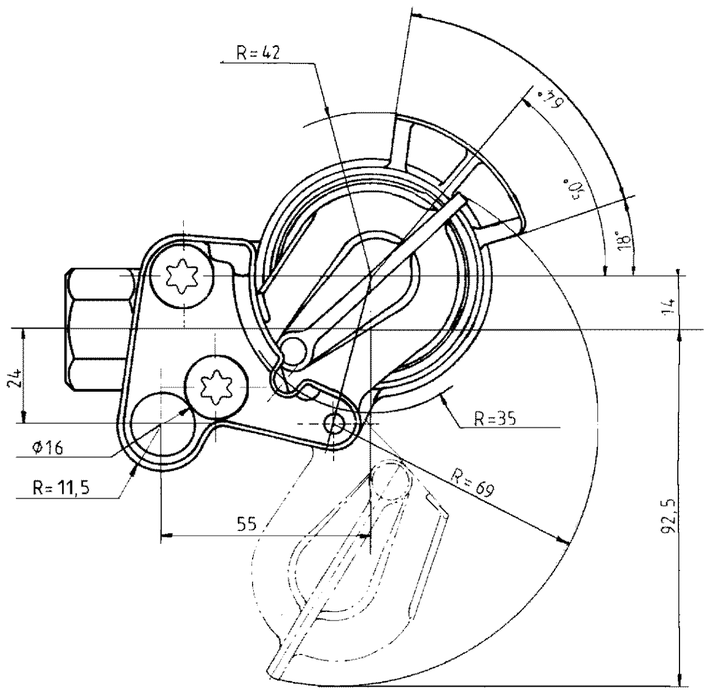

* ACCORDING TO JED-152
THREAD LENGTH MIN.= 13MM
THREAD LENGTH NOT VALID
WITH JED-152 BUT APPROVED

General Specification: JED-334-0						
Further Technical Data: PS 952 201 000 0						
Doc. Code:				Sheet:		To
General Tolerances JED-261						
		Range of Nominal Dimensions (± mm)				
Class	1)	≤ 50	> 50 ≤ 180	> 180 ≤ 400	> 400	∢
Fine		0.5	1.0	1.5	2.0	±3°
Medium	X	1.0	2.0	3.0	4.0	
Coarse		2.0	3.5	5.0	6.5	
Tapped Holes acc. JED-152						
1) Tolerance Class Applied Crossmarked						

Copyright WABCO®

	Date	Signature
Drawn	2012-05-25	CEPENDA
Checked	2012-05-25	HLADIK
Expert	CEPENDA	

WABCO

HOUSE COUPLING
KUPPLUNGDKOPF
TESTA D'ACCOMPANIAMENTO
TETE D'ACCOUPLEMENT

Mass	Scale	Material No.	Date of first issue: 2012-05-25		
0.245 KG	1:1	452 201 010 0	Doc. Code: 005	Language: ML	Sheet: 1/1
Size: A 2	CAD System: Pro/E				

ECN-No.	Revision		Techn. Resp.	Replacement for
157896	1	L	5710	-

100mm

Tutte Comunicazione od riproduzione di ce document, bude esploitation ou communication de son contenu sont interdites, sauf autorisation expresse. Tout manquement a cette regle constitue un delit, evident et expose son auteur au versement de dommages et interets. Tous droits de propriete industrielle reserves, notamment en matiere de brevets et de modeles.
Weitergabe sowie Vervielfaltigung dieser Unterlage, Verwertung und Mitteilung ihres Inhalts nicht gestattet, soweit nicht ausdrucklich zugesichert. Zuwiderhandlungen verpflichten zum Schadenersatz. Alle Rechte fuer den Fall der Patenterteilung oder Gebrauchsmuster-Eintragung vorbehalten.
Non e permesso consegnare o farli o riprodurre questo documento, ne utilizzarne il contenuto o renderlo comunque noto a terzi senza autorizzazione esplicita. Ogni violazione costituisce un evidente illecito e comporterà il risarcimento dei danni subiti.
E'fatta riserva di tutti i diritti derivanti da brevetti o modelli.
Copying of this document and giving it to others and the use or communication of the contents thereof, are forbidden without express authority. Contravention of this restriction will constitute an evident delict and result in a liability to the payment of damages. All rights are reserved in the event of the grant of patent or registration of a utility model or design. This document is the subject of copyright.