©		
<1>	SAFETY CHARACTERISTICS	1
<2>	SIGNIFICANT CHARACTERISTICS	0

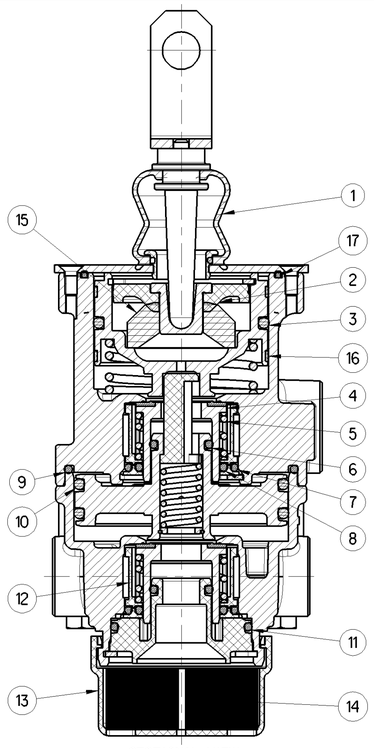

SECTIONAL VIEW

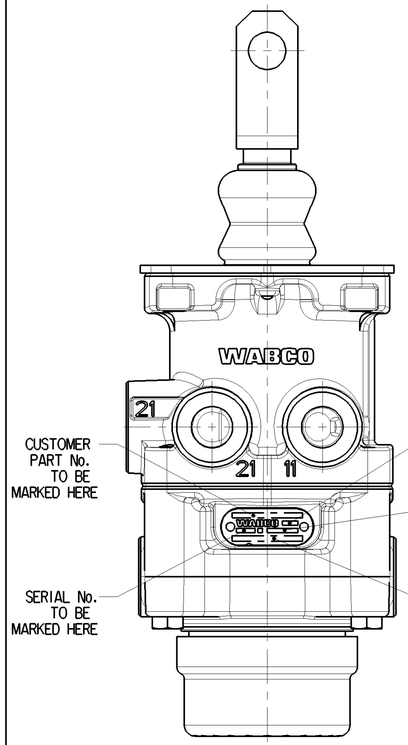

VIEW Q

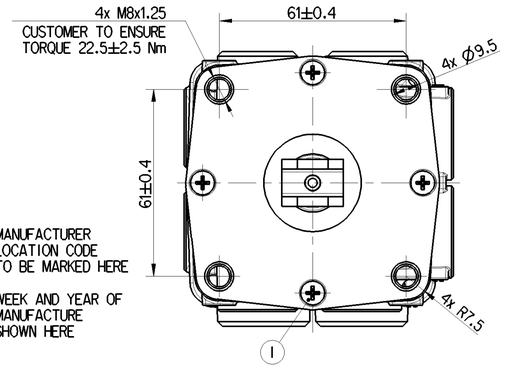

VIEW P

© PERFORMANCE CHARACTERISTICS

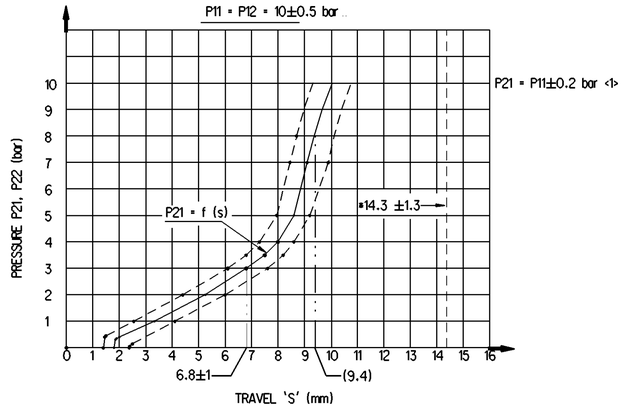

AT FAILURE OF CIRCUIT 1 { NECESSARY TRAVEL S ≥ 14 mm FOR P22 = P12 ; NECESSARY FORCE F = 3900 N }

BIAS (P21-P22) ≤ 0.2 bar

* STOP PROVIDED WITHIN THE VALVE

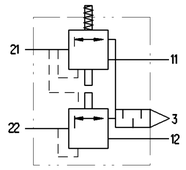

CIRCUIT DIAGRAM

11/12 - INLET
21/22 - DELIVERY
3 - EXHAUST

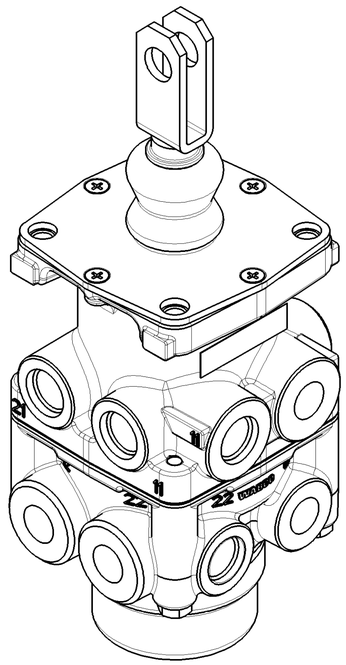

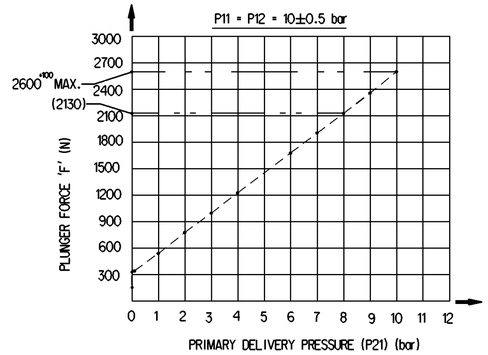

SL.No.	NOTES	
1	PRODUCT FUNCTION AND RELIABILITY	
1.1	PRODUCT SPECIFICATION No.	PS 461 100 016 0
1.2	WORKING MEDIUM	AIR
1.3	NORMAL WORKING PRESSURE	10 bar
1.4	MAXIMUM OPERATING PRESSURE (TEMPORARILY)	13 bar
1.5	EQUIVALENT FLOW DIAMETER	10 mm
1.6	NOISE LEVEL WHEN TESTED AS PER PS 461 100 016 0	≤ 72 dB(A)
1.7	THERMAL RANGE OF APPLICATION	- 40°C TO +80°C
1.8	INSTALLATION POSITION	OPTIONAL
1.9	CORROSION RESISTANCE	240 HOURS OF NSS.
2	QUALITY COMPLIANCE TESTS WILL BE CARRIED OUT REGULARLY AS PER CLAUSE No.06 OF PS 461 100 016 0	
3	SERVICE LIFE TO FIRST OVERHAUL 3 YEARS / 300000 KM WHICHEVER IS EARLIER IF FITTED AS PER RECOMMENDED LAYOUT	
4	OPEN PORTS ARE FITTED WITH CLOSURE PLUGS FOR STORAGE AND TRANSIT PURPOSES	

© MSP 6/40 - REPAIR KIT CONSISTS OF ITEMS SHOWN

S.No.	CUSTOMER PART No.	WIN PART No.	DESCRIPTION	QTY
1		4611106504	BOOT	1
2		M630180	SPRING SEAT	1
3		8979801304	SEALING RING	1
4		M610171	VALVE	2
5		M632780	SPRING	2
6		8970800424	SEALING RING	2
7		8979802154	SEALING RING	2
8		8979877104	SEALING RING	2
9		8979802504	SEALING RING	1
10		8979801344	SEALING RING	2
11		8979801104	SEALING RING	1
12		M632770	FILTER	2
13		M632810	BOTTOM COVER	1
14		M337960	MESH	1
15		M630170	RUBBER SPRING	1
16		M630220	GUIDE RING	2
17		4611101404	GASKET	1
18		M919910	GREASE SACHET	2

MSP 6/42 - REPAIR KIT CONSISTS OF ITEMS SHOWN

13		M632810	BOTTOM COVER	1
14		M337960	MESH	1

SERVICABLE PARTS

1		4611106504	BOOT	1

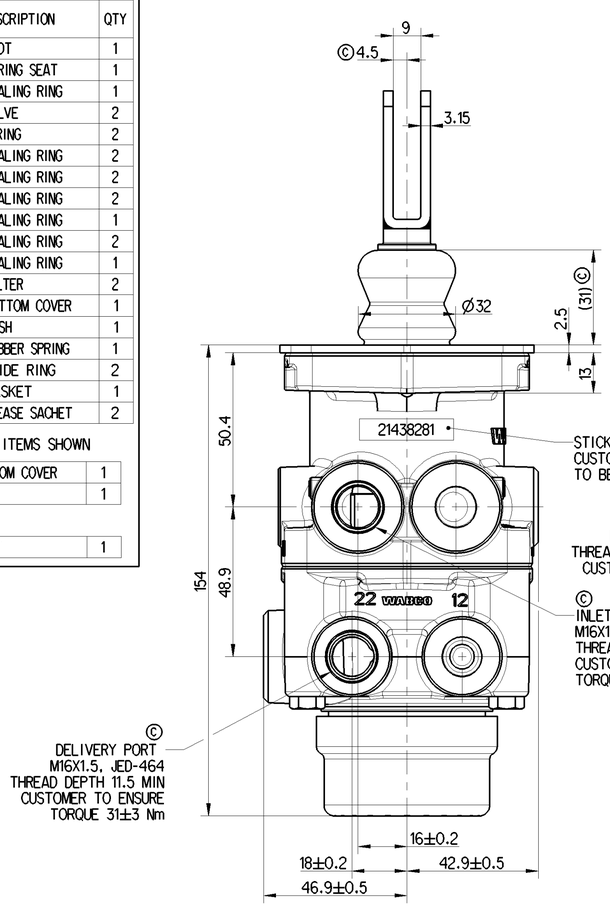

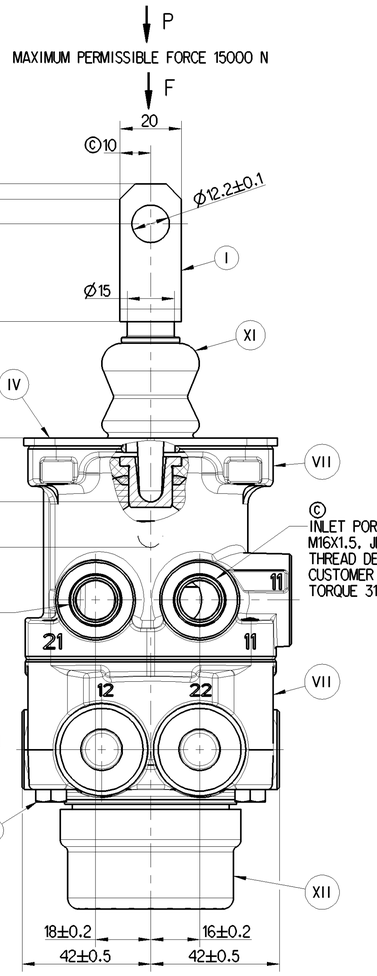

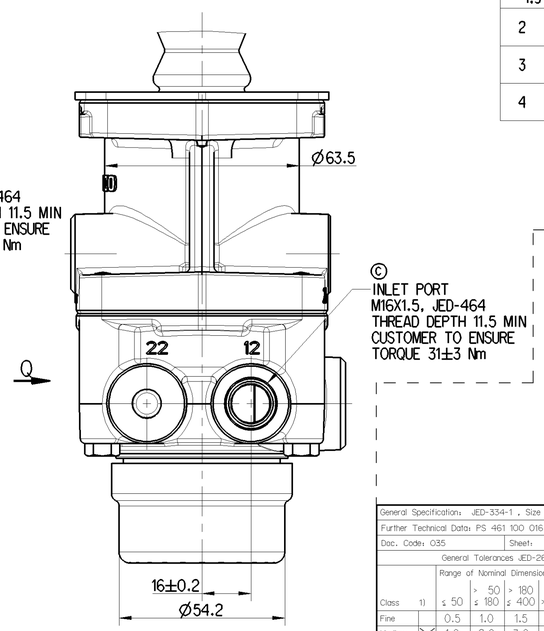

XVII	STEEL	NO TREATMENT
XVI	CAST IRON	PLATED
XV	STEEL	ZINC IRON PLATED
XIV	CAST IRON	NO TREATMENT
XIII	ZINC ALLOY	ANODISED
XII	PLASTIC	NO TREATMENT
XI	RUBBER	NO TREATMENT
X	STAINLESS STEEL	NO TREATMENT
IX	BRASS	NO TREATMENT
VIII	ZINC ALLOY	CHROMATED
VII	ALUMINIUM ALLOY	ANODISED
VI	ALUMINIUM ALLOY	CHROMATED
V	CAST IRON	PAINTED
IV	STEEL	POWDER COATED
III	STEEL	PAINTED
II	STEEL	PHOSPHATED
I	STEEL	ZINC PLATED
PART CODE	MATERIAL	SURFACE PROTECTION

General Specification: JED-334-1 , Size ISO 14405 LP
Further Technical Data: PS 461 100 016 0
Doc. Code: 035 Sheet: 1 To 6

General Tolerances JED-261

Class 1)	Range of Nominal Dimensions (± mm) ≤ 50	> 50 ≤ 180	> 180 ≤ 400	> 400	
Fine	0.5	1.0	1.5	2.0	±3°
Medium	1.0	2.0	3.0	4.0	
Coarse	2.0	3.5	5.0	6.5	

Topped Holes acc.
1) Tolerance Class Applied Crossmarked

Copyright WABCO®

Date	Signature
Drawn 2017-09-12	Gokul
Checked 2017-09-14	Vinothkumar
Expert Vinothkumar R	

WABCO

FOOT BRAKE VALVE

Mass	Scale	Material No.	Date of first issue: 2011-08-04		
1.5 KG	1:1	461 100 016 0	Doc.-Code 005	Language EN	Sheet 1/1
Size A 1	CAD System CREO	ECN-No. 168337	Revision 12 C	Techn. Resp. 5180_WIN	Replacement for -

100mm

Tous droits de propriété intellectuelle réservés, notamment en matière de brevets et de modèles.
Weitergabe sowie Vervielfältigung dieser Unterlage, Verwertung und Mitteilung ihres Inhalts nicht gestattet, soweit nicht ausdrücklich zugestanden. Zuwiderhandlungen verpflichten zu Schadenersatz. Alle Rechte für den Fall der Patent- oder Gebrauchsmustereintragung vorbehalten.
Non è permesso consegnare a terzi o riprodurre questo documento, né utilizzare il contenuto o renderlo comunque noto a terzi senza esplicita autorizzazione. Contravvenzioni obbligano al risarcimento dei danni. Tutti i diritti derivanti da brevetti o modelli.
Copying of this document and giving it to others and the use or communication of the contents thereof, are forbidden without express authority. Offenders are liable to the payment of damages. All rights are reserved in the event of the grant of patent or registration of a utility model or design. This document is the subject of copyright.

Form No. 461 000 0050 ... A02 | Date Last Review | Version