SAFETY CHARACTERISTICS	0
SIGNIFICANT CHARACTERISTICS	0
CUSTOMER INTERFACE	0

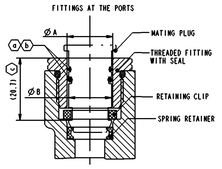

PORT	Ø A	Ø B
JED-388-0-M22x1.5	Ø 15 +0.043	(Max. Ø14.95)
JED-388-0-M16x1.5	Ø 9.5 +0.036	(Max. Ø9.45)

(a) ASSEMBLY LOAD NOT TO EXCEED 80 N WITH PREGREASE ON SEALS.
(b) SEALS ON THE PLUG ARE THE RESPONSIBILITY OF PLUG MANUFACTURER WITH REFERENCE TO DIMENSION "Ø A" & "Ø B".
(c) MAXIMUM INSERTION DEPTH OF PLUG TILL LOCKING.

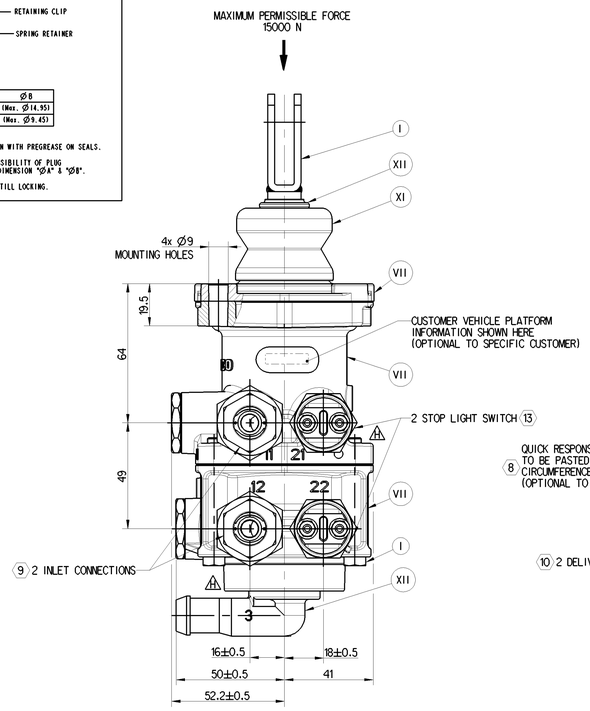

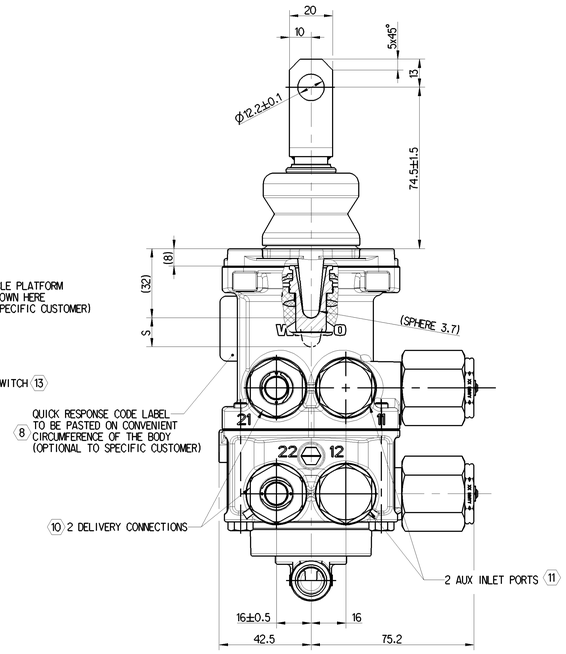

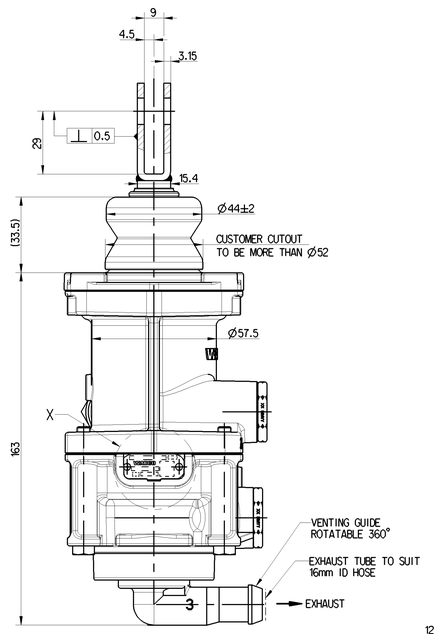

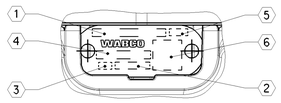

X
2:1
NAME PLATE DETAILS

1. CUSTOMER PART NUMBER
2. BATCH CODE
3. SERIAL NUMBER
4. WABCO PART NUMBER
5. PRI CODE
6. 2D DATA MATRIX

PERFORMANCE CHARACTERISTICS

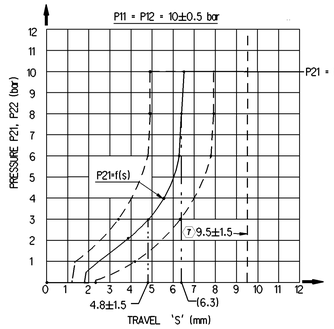

AT FAILURE OF CIRCUIT 1 { NECESSARY TRAVEL MAX. 11 mm FOR P22 = P12; NECESSARY FORCE F = 3400 N }

BIAS (P21-P22) ≤ 0.35 bar

7 STOP PROVIDED WITHIN THE VALVE

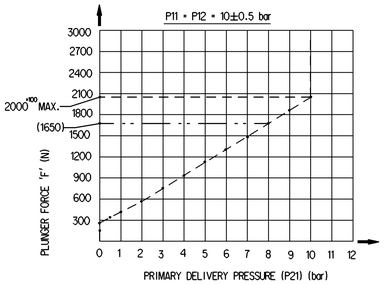

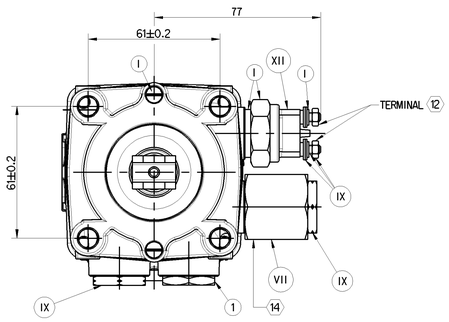

8 QR CODE LABEL DETAILS

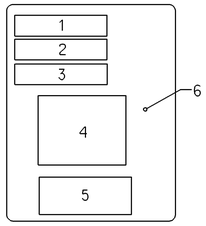

NR.	FIELD	SAMPLE DATA
1	PART IDENTIFICATION CODE	XXX
2	CUSTOMER PART No.	XXXXXXXXXXXXX
3	VENDOR CODE	XXXXXX
4	QR CODE	REFER TABLE 1
5	CONTENTS IN QR CODE	a : b : c : d : e : f
6	REMAINING AREA	-

TABLE 1: CONTENTS OF QR CODE

SL. Ref	FIELD	SAMPLE DATA
a)	PART IDENTIFICATION CODE	XXX
b)	CUSTOMER PART No.	XXXXXXXXXXXXX
c)	VENDOR CODE	XXXXXX
d)	MANUFACTURING DATE	XXXXXX
e)	MANUFACTURING SHIFT	XX
f)	SERIAL No.	XXX

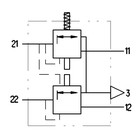

CIRCUIT DIAGRAM

11/12 - INLET
21/22 - DELIVERY
3 - EXHAUST

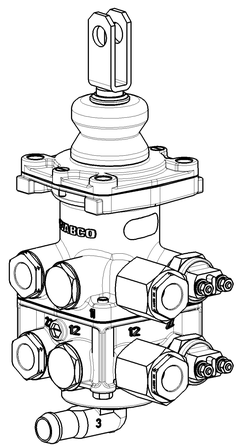

SL.No.	NOTES	
1	PRODUCT FUNCTION AND RELIABILITY	
1.1	WORKING MEDIUM	AIR
1.2	NORMAL WORKING PRESSURE	10 bar
1.3	MAXIMUM WORKING PRESSURE (TEMPORARILY)	13 bar
1.4	NOMINAL FLOW (78.5 mm sq) APPROX	10 mm
1.5	THERMAL RANGE OF APPLICATION	-40°C TO +80°C
1.6	CORROSION RESISTANCE	240 HOURS OF NSS
2	QUALITY COMPLIANCE TESTS WILL BE CARRIED OUT REGULARLY AS PER CLAUSE No. 6 OF PS 9618990410	
3	SERVICE LIFE TO FIRST OVERHAUL- 3 YEARS / 300000 KM WHICHEVER IS EARLIER IF FITTED AS PER RECOMMENDED LAYOUT	
4	OPEN PORTS ARE FITTED WITH CLOSURE PLUGS AND STOPLIGHT SWITCHES TO BE COVERED WITH PROTECTION SLEEVE FOR STORAGE AND TRANSIT PURPOSES	

PART CODE	MATERIAL	SURFACE PROTECTION
XVII	STEEL	NO TREATMENT
XVI	CAST IRON	PLATED
XV	STEEL	ZINC IRON PLATED
XIV	CAST IRON	NO TREATMENT
XIII	ZINC ALLOY	ANODISED
XII	PLASTIC	NO TREATMENT
XI	RUBBER	NO TREATMENT
X	STAINLESS STEEL	NO TREATMENT
IX	BRASS	NO TREATMENT
VIII	ZINC ALLOY	CHROMATED
VII	ALUMINIUM ALLOY	ANODISED
VI	ALUMINIUM ALLOY	CHROMATED
V	CAST IRON	PAINTED
IV	STEEL	POWDER COATED
III	STEEL	PAINTED
II	STEEL	PHOSPHATED
I	STEEL	ZINC PLATED

PRODUCT / DETAILS	S.L.SWITCH
CONTACT CLOSING PRESSURE (bar)	0.5 MAX
PSSC	268C
WEIGHT	50 g

	9	10	11	12	13	14
THREAD TYPE	M22X1.5 - HEX.24 FITTINGS TO SUIT MATING SYSTEM EQUIVALENT TO VOSS 230	M22X1.5 - HEX.24 FITTINGS TO SUIT MATING SYSTEM EQUIVALENT TO VOSS 230	M22X1.5 - PLUGGED HEX 24	M4X0.7 - HEX 7	M14X1.5 - HEX 27	M16X1.5 - HEX 30
PERMISSIBLE TORQUE	10±1 Nm	10±1 Nm	10±1 Nm	1±0.1 Nm	23±2 Nm	31.5±2.5 Nm

This document contains information which is proprietary to WABCO and may not be reproduced or disclosed to third parties without prior written consent of WABCO. Any infringement will be prosecuted. Validity of this document and copies is limited only to authorized recipients of WABCO. Ce document est la propriété de WABCO. Il ne peut être reproduit ou communiqué à des tiers sans son autorisation préalable. Toute infraction sera poursuivie. Seuls les destinataires autorisés de WABCO peuvent faire un usage de ce document et de ses copies. Ce document est la propriété de WABCO. Il ne peut être reproduit ou communiqué à des tiers sans son autorisation préalable. Seuls les destinataires autorisés de WABCO peuvent faire un usage de ce document et de ses copies.

General Specification: ISO 8015, JED-334-1, Size ISO 14405 LP				Copyright ZF®	
Further Technical Data: PS 961 899 041 0				Date / Signature	
Doc. Code: 035	Sheet: 1 To 6			Drawn: 2023-08-07 KARTHIC	FOOT BRAKE VALVE
General Tolerances: JED-261				Checked: 2023-08-08 Gokul P	
Dimensions in mm					
Mass: 1.7 kg	Scale: 1:1 / 2:1	Material No.: 461 100 123 0		Date of first issue: 2019-04-12	
Doc.Code: 005	Language: EN	Sheet: 1/1			
Size: A 0	CAD System: CREO	EDB No.: 511823	Revision: 2 H	Techn. Resp.: 5180.WIN	Replacement for: -