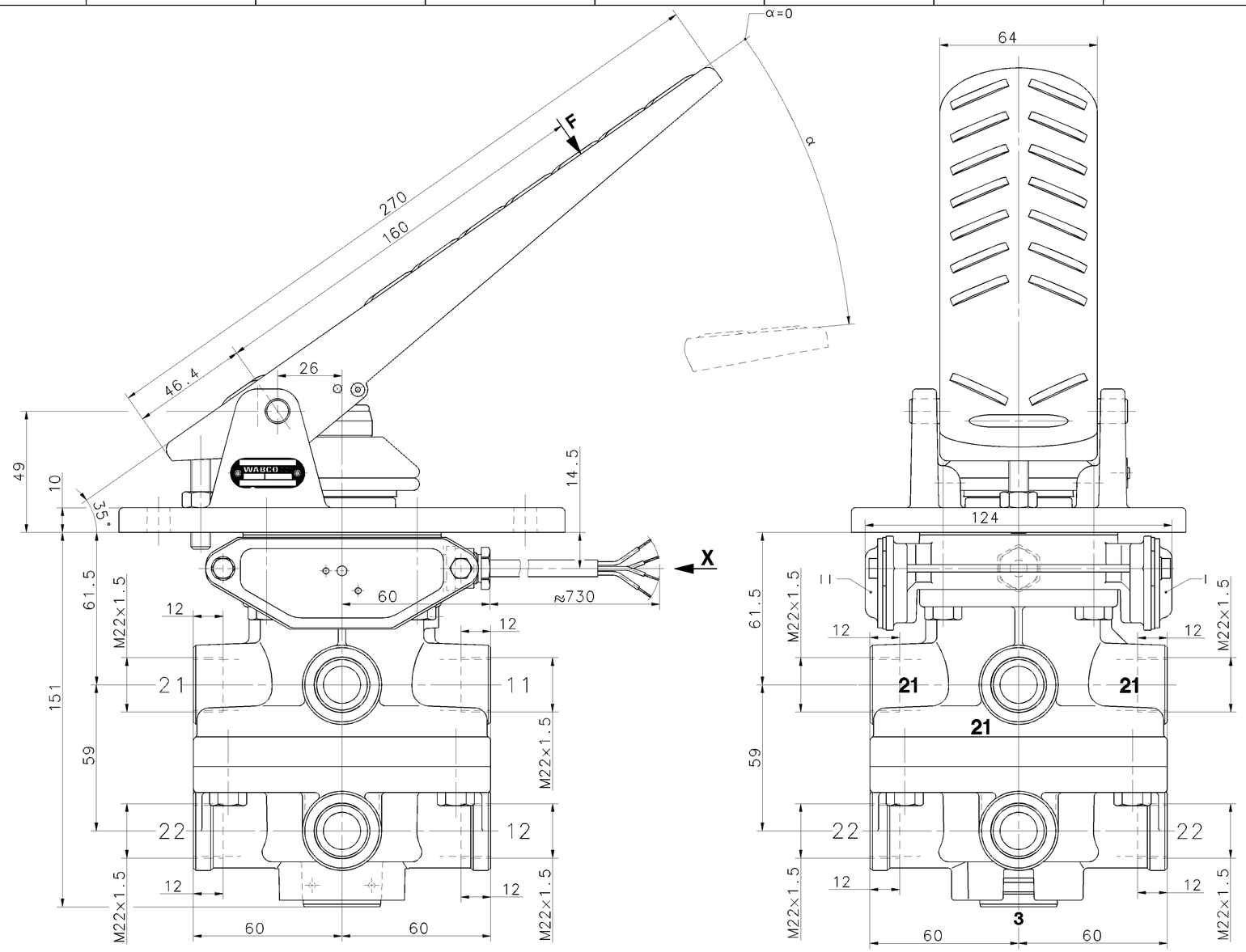

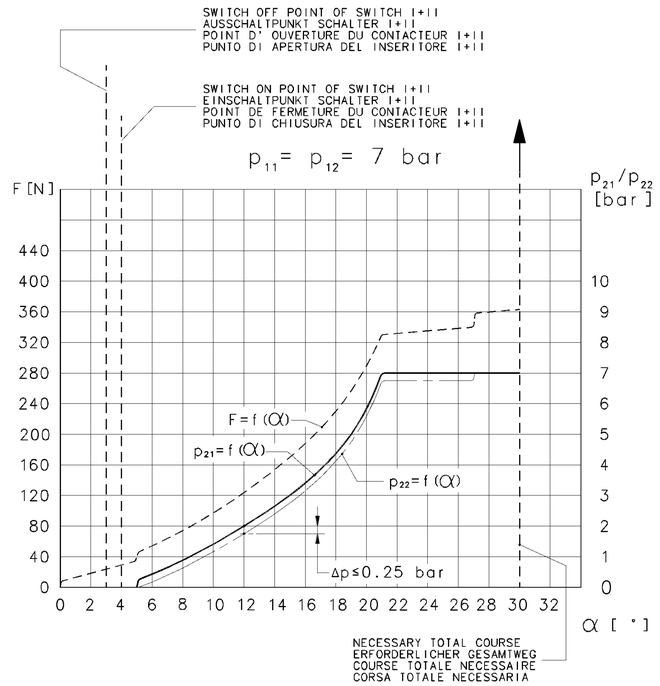

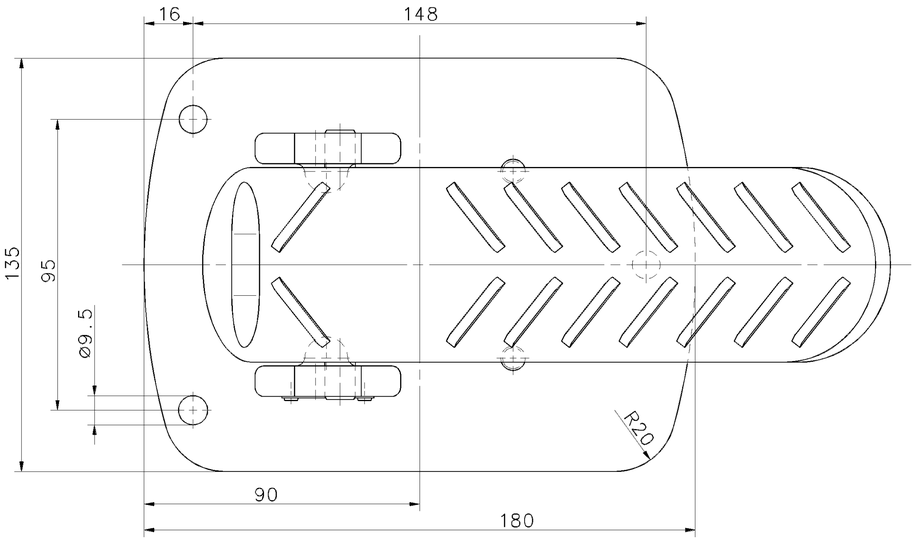

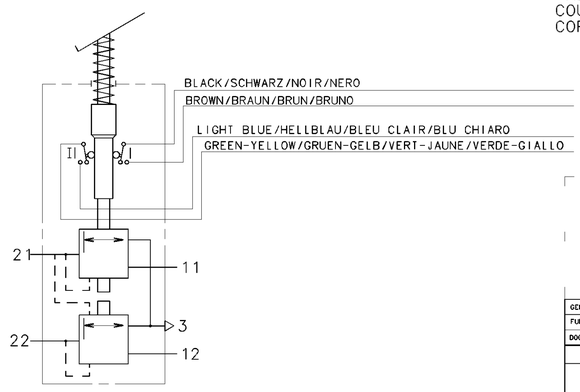

11/12	SUPPLY VORRAT ALIMENTATION ALIMENTAZIONE	21/22	OUTLET AUSGANG SORTIE USCITA
3	EXHAUST ENTLUEFTUNG ECHAPPEMENT SCARICO		

MEDIUM: AIR
MEDIUM: LUFT
FLUIDE: AIR
FLUIDO: ARIA

NOMINAL DIAMETER :
NENNWEITE :
DIAMETRE NOMINAL :
DIAMETRO NOMINALE : 78.5 mm² ≙ ø10

WORKING PRESSURE :
BETRIEBSDRUCK :
PRESSION D'UTILISATION : pe max.= 7 bar
PRESSIONE DI ESERCIZIO :

(TEMPORARILY :
(KURZZEITIG :
(DE COURTE DUREE : pe max.= 8 bar)
(BREVE TEMPO SOLO :

THERMAL RANGE OF APPLICATION :
THERM. ANWENDUNGSBEREICH :
GAMME D'APPLICATION THERMIQUE : -40°C...+80°C
CAMPO DI APPLICAZIONE TERMICA :

INSTALLATION POSITION : OPTIONAL
EINBAULAGE : BELIEBIG
POSITION D'INSTALLATION: INDIFFERENT
POSIZIONE DI MONTAGGIO : INDIFFERENTE

SWITCH LOAD I,II : AT 24 V - 1 A (INDUCTIVE LOAD)
SCHALTERBELASTUNG I,II : BEI 24 V - 1 A (INDUKTIVE LAST)
CHARGE DU CONTACTEUR I,II : A 24 V - 1 A (CHARGE INDUCTIVE)
CARICO DELL INSERITORE I,II: A 24 V - 1 A (CARICO INDUTTIVO)

TORQUE FOR CONNECTIONS:
ANZUGSMOMENT FUER EINSCHRAUBSTUTZEN:
COUPLE DE SERRAGE DES RACCORDS: M22×1.5: M=MAX. 53 Nm
COPPIA DI SERRAGGIO DEI RACCORDI:

GENERAL SPECIFICATION:	JED-334		
FURTHER TECHNICAL DATA:			
DOC. CODE:	SHEET: 10		
GENERAL TOLERANCES			
CLASS 1)	RANGE OF NOMINAL DIMENSIONS (± mm) ≤50 / >50 ≤180 / >180 ≤400 / >400		
FINE	0,5 / 1,0 / 1,5 / 2,0		
MEDIUM X	1,0 / 2,0 / 3,0 / 4,0	± 3°	
COARSE	2,0 / 3,5 / 5,0 / 6,5		
TAPPED HOLES ACC. ISO 4039 / JED-152		085322	1xB 03-08-11
1) TOLERANCE CLASS APPLIED CROSSMARKED		DCN-NO.	REV. DATE

CADAM-DRAWING COPYRIGHT

DATE	SIGNATURE
98-10-20	M.SGF
98-10-20	MARTINI

DRAWN: / CHECKED: / STANDARDIZATION:

WABCO

DUAL BRAKE VALVE
MOTORWAGENBREMSVENTIL
ROBINET DE FREINAGE DOUBLE
DISTRIBUTORE DI COMANDO DOPPIO

MASS	SCALE	PRODUCT IDENTIFICATION NO.	DOC. CODE	SHEET
KG	1:1	461 310 201 0	605	1/1
SIZE	I.R.I.			
A 1	140		SHAPE CODE	REPLACEMENT FOR 461 310 201 0 OF 1987-03-09 (C)

100mm

EXPERT CODE 7 3 6 PRODUCT TYPE 0 0 X

1009/016/3/04.93 H 605/653

TOUTE COMMUNICATION OU REPRODUCTION DE CE DOCUMENT, TOUTE EXPLOITATION OU COMMUNICATION DE SON CONTENU OU REPRODUCTION DE SES DISPOSITIONS TECHNIQUES, NE SONT PAS AUTORISEES SAUF AUTORISATION EXPRESSE. TOUS DROITS DE PROPRIETE LIE AUX BREVETS, MODELES DE SERVITUDE OU MARQUES DE FABRIQUE RESERVES.

NON E PERMESSO CONSEGNARE A TERZI O RIPRODURRE QUESTO DOCUMENTO, NE UTILIZZARNE IL CONTENUTO O RENDERNE ACCESSIBILE IL CONTENUTO A TERZI, SALVO ESPRESSA AUTORIZZAZIONE. TUTTI I DIRITTI DI PROPRIETA' INTELLETTUALE DERIVANTI DA BREVETTI, MODELLI DI UTILITA' O MARCHI DI FABBRICA SONO RISERVATI.

WITEGERS GEWE VERVIELFAELTIGUNG DIESER UNTERLAGE, VERWENDUNG UND MITTEILUNG IHres INHALTS NICHT GESTATTET. SOWEIT NICHT AUSDRUECKLICH ZUGESTANDEN, SIND ALLE RECHTE FUER EINTRAGUNGEN, GEBRAUCHSMUSTER ODER MARKENEINTRAEGE VORBEHALTEN.

COPYING OF THIS DOCUMENT AND GIVING IT TO OTHERS AND THE USE OR COMMUNICATION OF THE CONTENTS THEREOF, ARE FORBIDDEN WITHOUT PRIOR EXPRESS AUTHORITY. ALL RIGHTS ARE RESERVED TO THE EXTENT THE GRANT OF PATENT OR REGISTRATION OF A UTILITY MODEL OR DESIGN IS THE SUBJECT OF COPYRIGHT.