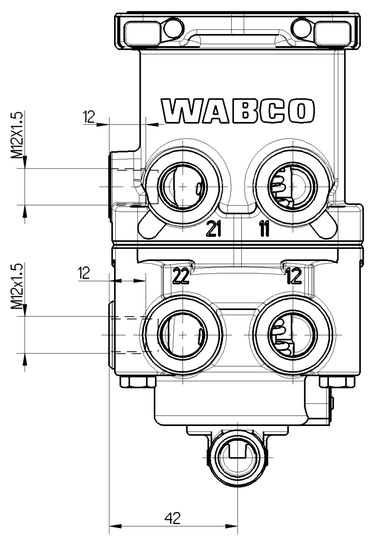

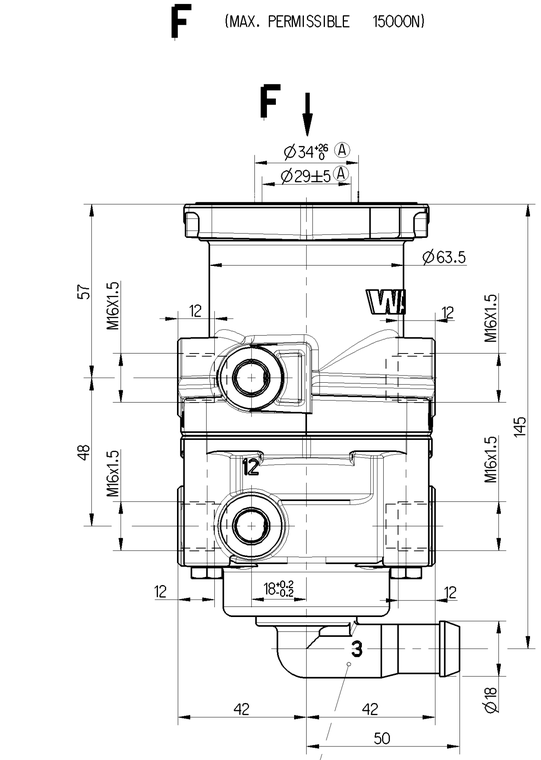

PLASTIC VENTING GUIDE TURNABLE: 360°

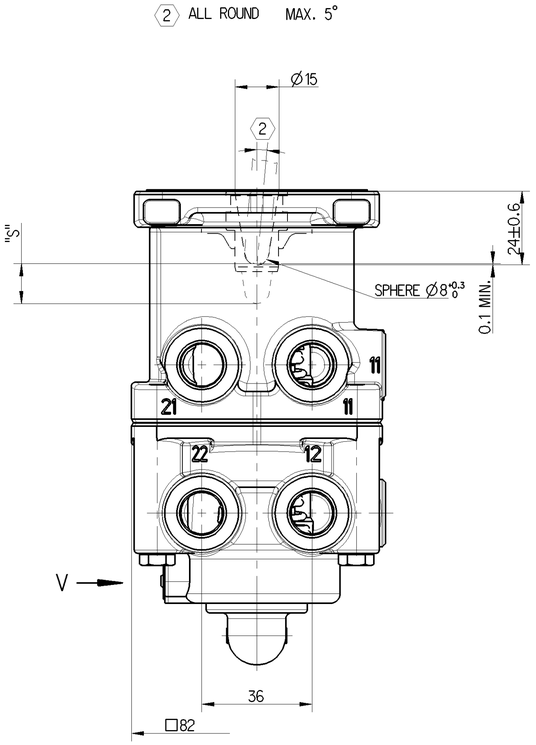

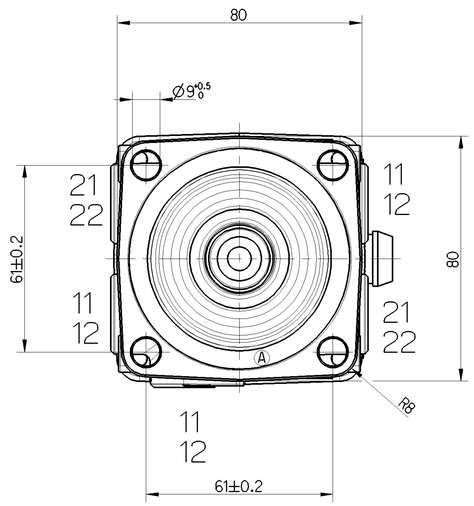

TORQUE FOR CONNECTIONS : M16x1.5 : M = MAX . 34 Nm
M12x1.5 : M = MAX . 21 Nm

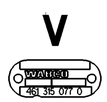

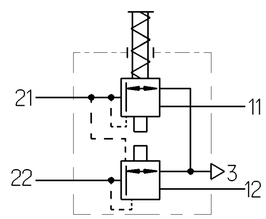

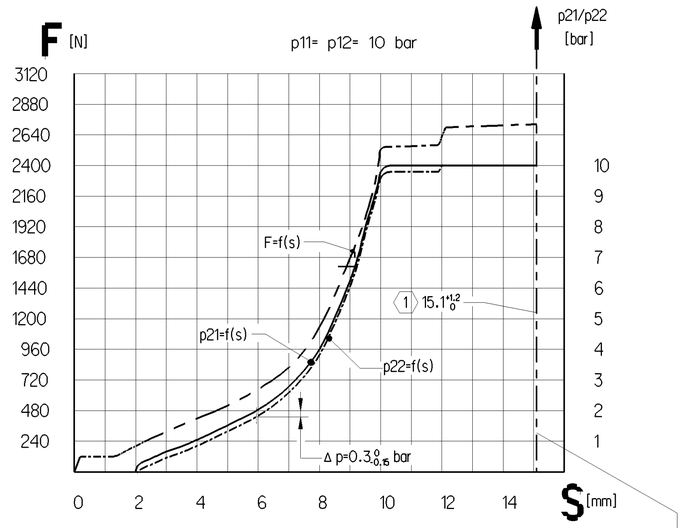

AT FAILURE CIRCUIT 1: NECESSARY COURSE S ≥ 14 mm
NECESSARY FOURCE F = 4100 N

1 STOP WITHIN THE DEVICE ADMISSIBLE

11/12 SUPPLY 21/22 OUTLET 3 EXHAUST

MEDIUM: AIR NOMINAL DIAMETER: 78.5mm^2 = Ø10

WORKING PRESSURE: pe = MAX. 10 bar TEMPORARILY: pe = MAX. 12 bar

THERMAL RANGE OF APPLICATION : -40°C ... +80°C

INSTALATION POSITION: OPTIONAL

Ⓐ

General Specification: JED-334-1 , Size ISO 14405 LP							
Further Technical Data:							
Doc. Code:			Sheet:		To		
General Tolerances JED-261							
	Range of Nominal Dimensions (± mm)						
Class 1)		≤ 50	> 50 ≤ 180	> 180 ≤ 400	> 400	∢	
Fine		0.5	1.0	1.5	2.0		
Medium	X	1.0	2.0	3.0	4.0	±3°	
Coarse		2.0	3.5	5.0	6.5		
Tapped Holes acc. ISO 4039/JED-152							
1) Tolerance Class Applied Crossmarked							

Copyright WABCO®

Date	Signature
Drawn 2015-08-11	Qiu
Checked 2015-09-23	Adamski
Expert Adamski	

WABCO

BRAKE VALVE

Mass	Scale	Material No.	Date of first issue: 2015-09-23		
1.35 KG	1:1	461 315 077 0	Doc.Code 005	Language EN	Sheet 1/1
Size A 1	CAD System CREO	ECN-No. 166319 / Revision 4X A / Techn. Resp. 5180	Replacement for		

100mm

Toute Communication ou reproduction de ce document, toute exploitation ou communication de son contenu sont interdites, sauf autorisation écrite. Tous droits de propriété industrielle réservés, notamment en matière de brevets et de modèles.

Non è permesso consegnare a terzi o riprodurre questo documento, né utilizzare il contenuto o renderlo comunque noto a terzi senza autorizzazione scritta. Ci riserviamo ogni diritto di proprietà industriale, anche per quanto attiene ai brevetti e ai modelli.

Weitergabe sowie Vervielfältigung dieser Unterlage, Verwertung und Mitteilung ihres Inhalts nicht gestattet, soweit nicht ausdrücklich zugestanden. Zuwiderhandlungen verpflichten zu Schadensersatz. Alle Rechte für den Fall der Patent-, Gebrauchsmuster- oder Geschmacksmustereintragung vorbehalten.

Copying of this document and giving it to others and the use or communication of the contents thereof, are forbidden without express authority. Offenders are liable to the payment of damages. All rights are reserved in the event of the grant of patent or registration of a utility model or design. This document is the subject of copyright.