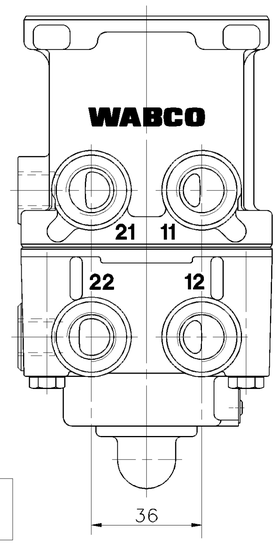

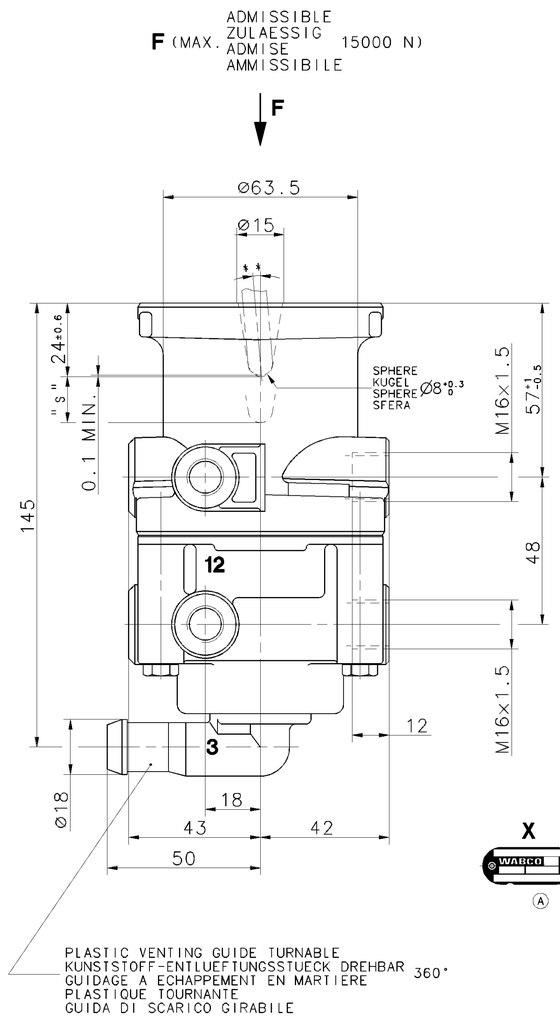

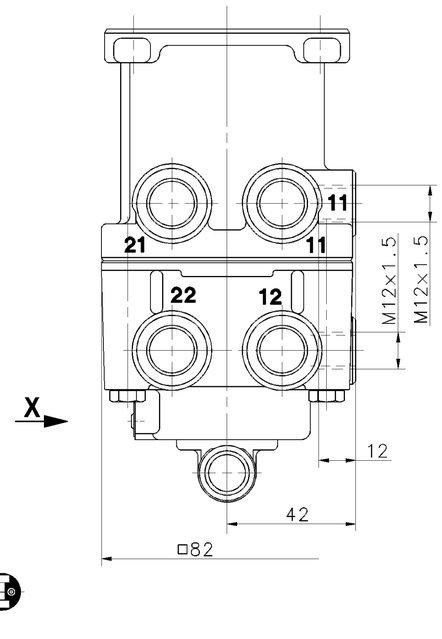

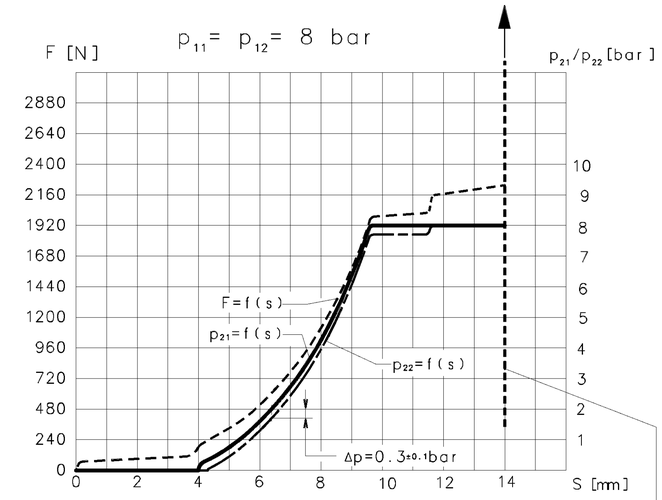

STOP WITHIN THE DEVICE ADMISSIBLE
ANSCHLAG IM GERAET ZULAESSIG
BUTEE DANS L APPARAIL ADMISE
ARRESTO NEL APPARATO AMMISSIBILE

AT FAILURE CIRCUIT 1 : NECESSARY COURSE S ≥ 14 mm
NECESSARY FORCE F = 3400 N
BEI AUSFALL KREIS 1 : ERFORDERLICHER WEG S ≥ 14 mm
ERFORDERLICHE KRAFT F = 3400 N *
EN CAS DE DEFAILANCE : COURSE NECESSARIA S ≥ 14 mm
CIRCUIT 1 FORCE NECESSARIA F = 3400 N
IN CASO DI DIFETTO CORSA NECESSARIA S ≥ 14 mm
CIRCUITI 1 FORZA NECESSARIA F = 3400 N

11 / 12 SUPPLY / VORRAT / ALIMENTATION / ALIMENTAZIONE

21 / 22 OUTLET / AUSGANG / SORTIE / USCITA

3 EXHAUST / ENTLUEFTUNG / ECHAPPEMENT / SCARICO

THERMAL RANGE OF APPLICATION:
THERMISCHER ANWENDUNGSBEREICH:
GAMME D' APPLICATION THERMIQUE:
CAMPO DI APPLICAZIONE: -40°C...+80°C

MEDIUM: AIR
MEDIUM: LUFT
FLUIDE: AIR
FLUIDO: ARIA

NOMINAL DIAMETER:
NENNWEITE:
DIAMETRE NOMINAL:
DIAMETRO NOMINALE: 78.5 mm² ≙ Ø10

WORKING PRESSURE:
BETRIEBSDRUCK:
PRESSION D'UTILISATION : Pe =MAX. 8.5bar
PRESSIONE DI ESERCIZIO :

(TEMPORARILY :
(KURZZEITIG :
(DE COURTE DUREE : p_e =MAX. 10 bar)
(BREVE TEMPO SOLO :

TORQUE FOR CONNECTIONS:
ANZUGSMOMENT FUER EINSCHRAUBSTUTZEN:
COUPLE DE SERRAGE DES RACCORDS:
COPPIA DI SERRAGGIO DEI RACCORDI:

M16×1.5: M=MAX. 34 Nm
M12×1.5: M=MAX. 21 Nm

INSTALLATION POSITION : OPTIONAL
EINBAULAGE : BELIEBIG
POSITION D' INSTALLATION : A VOLONTE
POSIZIONE DI MONTAGGIO : A SCELTA

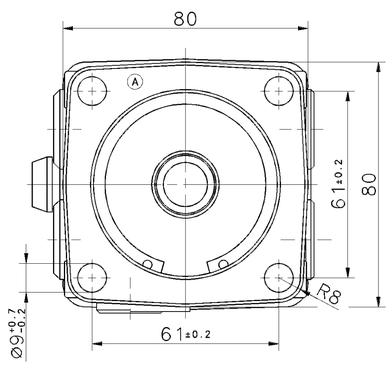

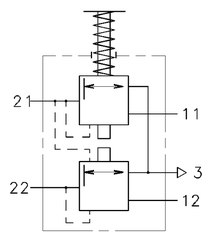

GENERAL SPECIFICATION:			JED-334			
FURTHER TECHNICAL DATA:						
DOC. CODE:			SHEET:	TO		
GENERAL TOLERANCES						
CLASS 1)	RANGE OF NOMINAL DIMENSIONS (± mm)					
	≤50	> 50 ≤180	>180 ≤400	>400		
FINE	0,5	1,0	1,5	2,0		
MEDIUM	1,0	2,0	3,0	4,0	± 3°	
COARSE	2,0	3,5	5,0	6,5		
TAPPED HOLES ACC. ISO 4039 / JED-152						
1) TOLERANCE CLASS APPLIED CROSSMARKED						

DCN-NO.	REV.	DATE
085333	2×A	03-08-15

CADAM-DRAWING COPYRIGHT

DATE	SIGNATURE
96-01-15	GIESEKE
96-01-15	MARTINI

DRAWN:
CHECKED:
STANDARDIZATION:

WABCO

BRAKE VALVE
MOTORWAGEN-BREMSVENTIL
ROBINET DE FREINAGE
DISTRIBUTORE DI COMANDO

MASS	SCALE	PRODUCT IDENTIFICATION NO.	DOC. CODE	SHEET
Pd 1.15 KG	1:1	461 315 462 0	605	1/1
SIZE A 1	I.R.I. 140		SHAPE CODE	REPLACEMENT FOR

100mm

EXPERT CODE 7 3 6

PRODUCT TYPE 0 0 X

TOUTE COMMUNICATION OU REPRODUCTION DE CE DOCUMENT, TOUTE EXPLOITATION OU COMMUNICATION DE SON CONTENU NON E PERMESSO CONSEGNARE A TERZI O RIPRODURRE QUESTO DOCUMENTO, NE UTILIZZARNE IL CONTENUTO O RENDERNE PUBBLICO IL CONTENUTO SENZA AUTORIZZAZIONE SCRITTA. TUTTI I DIRITTI RISERVATI IN CASO DI CONCESSIONE DI UN BREVETTO O DI UN MODELLO DI UTILITÀ DI DESIGN.
DEVIDO A REPRODUCTIONS DE DROITS DE PROPRIÉTÉ INTELLECTUELLE. TOUS DROITS DE PROPRIÉTÉ INTELLECTUELLE RÉSERVÉS EN CAS DE DÉPOSITION DE BREVET OU DE MODÈLE D'UTILITÉ.
WEITERGABE SOWIE VERVIELFÄLTIGUNG DIESES DOKUMENTES, VERWENDUNG UND MITTEILUNG ZIRES INHALTES NICHT GESTATTET. SOWEIT NICHT AUSDRÜCKLICH ZUGESTANDEN, ZUM FALL DER ERTEILUNG EINES PATENTES ODER EINES GEBRAUCHSMUSTERS ALLE RECHTE VORBEHALTEN.
COPYING OF THIS DOCUMENT AND GIVING IT TO OTHERS AND THE USE OR COMMUNICATION OF THE CONTENTS THEREOF ARE PROHIBITED. ALL RIGHTS ARE RESERVED IN THE EVENT OF A PATENT OR REGISTRATION OF A UTILITY MODEL OR DESIGN. THIS DOCUMENT IS THE SUBJECT OF COPYRIGHT.