F (MAX. ADMISSIBLE 15000 N)
ZULAESSIG
ADMISE
AMMISSIBILE

** ALL ROUND MAX.5°
ALLSEITIG
UNIVERSAL
SU CIASCUN LATO

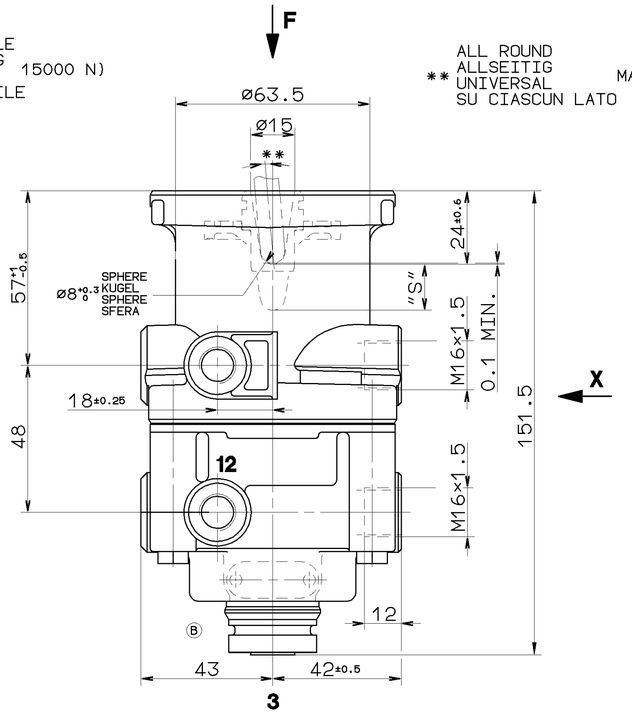


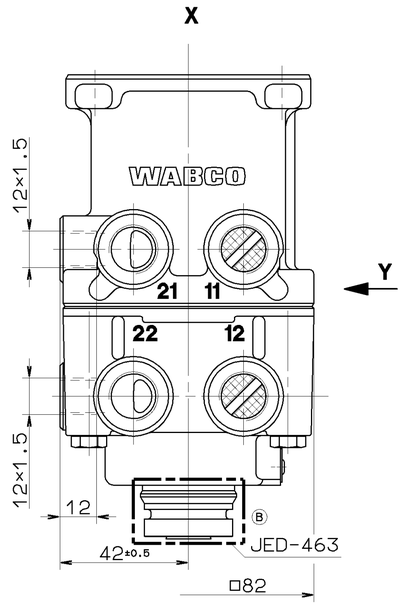


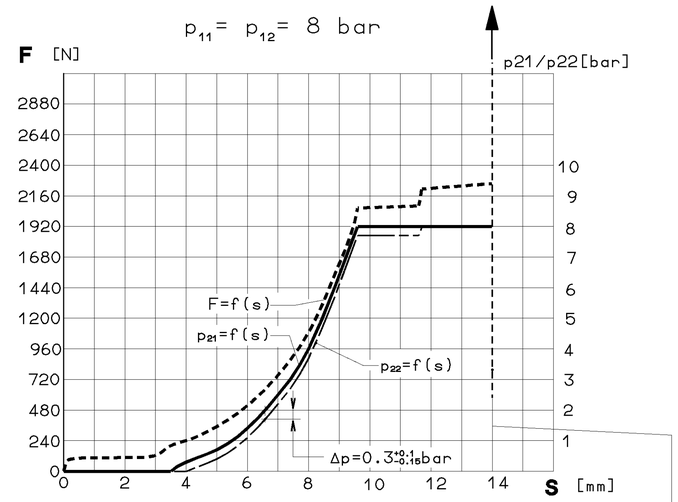


AT FAILURE CIRCUIT 1 : NECESSARY COURSE S ≥ 14 mm
NECESSARY FORCE F = 3400 N
BEI AUSFALL KREIS 1 : ERFORDERLICHER WEG S ≥ 14 mm
ERFORDERLICHE KRAFT F = 3400 N
EN CAS DE DEFAILANCE CIRCUIT 1 : COURSE NECESSARIA S ≥ 14 mm
FORCE NECESSARIA F = 3400 N
IN CASO DI DIFETTO CIRCUITI 1 : CORSA NECESSARIA S ≥ 14 mm
FORZA NECESSARIA F = 3400 N

*) STOP WITHIN THE DEVICE ADMISSIBLE
ANSCHLAG IM GERAET ZULAESSIG
BUTEE DANS L APPARAIL ADMISE
ARRESTO NEL APPARATO AMMISSIBILE

| | | | | | |
|---|---|---|---|---|---|
| 11/12 | SUPPLY<br>VORRAT<br>ALIMENTATION<br>ALIMENTAZIONE | 21/22 | OUTLET<br>AUSGANG<br>SORTIE<br>USCITA | 3 | EXHAUST<br>ENTLUEFTUNG<br>ECHAPPEMENT<br>SCARICO |

INSTALLATION POSITION: EXHAUST SHOWN AT BASE ( AXIS CENTRE OF THE DEVICE DEVIATES MAX. 45° FROM VERTICAL )
EINBAULAGE: ENTLUEFTUNG NACH UNTEN ( MITTELACHSE DES GERAETES MAX. 45° VON DER SENKRECHTEN ABWEICHEND )
POSITION D'INSTALLATION: ECHAPPEMENT VERS LE BAS ( ECART DE L'AXE MEDIAN DE L' APPAREIL PAR RAPPORT A LA RAPPORT A LA VERTICALE: 45° MAX. )
POSIZIONE DI MONTAGGIO: SCARICO VERSO IL BASSO ( DEVIAZIONE ASSE APPARECCHIO RISPETTO ALLA VERTICALE: MAX. 45° )

MEDIUM: AIR / MEDIUM: LUFT / FLUIDE: AIR / FLUIDO: ARIA
NOMINAL DIAMETER / NENNWEITE / DIAMETRE NOMINAL / DIAMETRO NOMINALE : 78.5 mm² ≙ Ø10

MAX. WORKING PRESSURE / MAX. BETRIEBSDRUCK / PRESSION D UTILISATION MAXI / PRESSIONE DI ESERCIZIO MAX. : pe = 8.5 bar
(TEMPORARILY / KURZZEITIG / DE COURTE DUREE / BREVE TEMPO SOLO: pe=MAX. 10bar)

THERMAL RANGE OF APPLICATION / THERM. ANWENDUNGSBEREICH / GAMME D APPLICATION THERMIQUE / CAMPO CI APPLICAZIONE TERMICA : -40°C...+80°C

TORQUE FOR CONNECTIONS / ANZUGSMOMENT FUER EINSCHRAUBSTUTZEN / COUPLE DE SERRAGE DES RACCORDS / COPPIA DI SERRAGIO DEI RACCORDI :
M12×1.5: M=MAX. 21Nm
M16×1.5: M=MAX. 34Nm

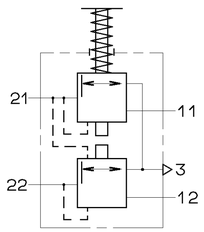


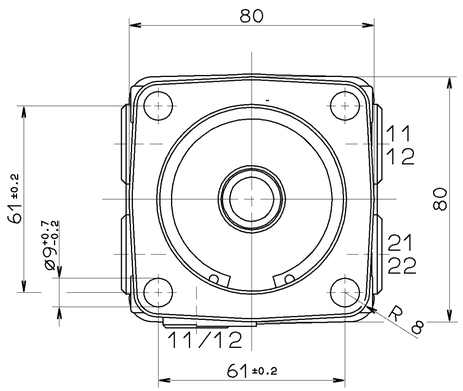


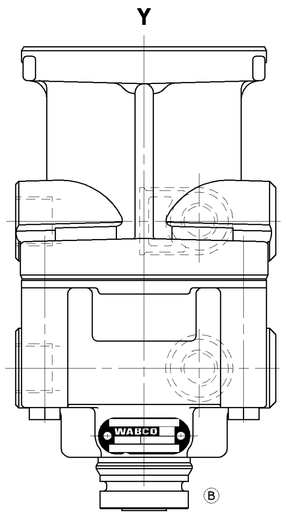


| | | | | | | | | |
|---|---|---|---|---|---|---|---|---|
| GENERAL SPECIFICATION: JED-334 | | | | | | | | |
| FURTHER TECHNICAL DATA: | | | | | | | | |
| DOC. CODE: | | | SHEET: TO | | | | | |
| GENERAL TOLERANCES | | | | | | | | |
| CLASS 1) | RANGE OF NOMINAL DIMENSIONS ( ± mm ) ≤50 | >50 ≤180 | >180 ≤400 | >400 | | | | |
| FINE | | 0,5 | 1,0 | 1,5 | 2,0 | | | |
| MEDIUM | X | 1,0 | 2,0 | 3,0 | 4,0 | ± 3° | | |
| COARSE | | 2,0 | 3,5 | 5,0 | 6,5 | | | |
| TAPPED HOLES ACC. ISO 4039 / JED-152 | | | | | | | 069714 | 4×A 99-01-28 |
| 1) TOLERANCE CLASS APPLIED CROSSMARKED | | | | | | | DCN-NO. | REV. DATE |

CADAM-DRAWING COPYRIGHT
DATE SIGNATURE
DRAWN: 99-01-28 SOMMER
CHECKED: 99-01-28 MARTINI
STANDARDIZATION:

**WABCO**

BRAKE VALVE
MOTWGN-BREMSVENTIL
ROBINET DE FREINAGE
DISTRIBUTORE DI COMANDO

| MASS | SCALE | PRODUCT IDENTIFICATION NO. | DOC. CODE | SHEET |
|---|---|---|---|---|
| 1.150 KG | 1:1 | 461 315 465 0 | 605 | 1/1 |
| SIZE A 1 | T.R.I. 140 | 518 | SHAPE CODE | REPLACEMENT FOR 461 315 482 0 OF 99-01-11 (A) |

100mm
EXPERT CODE 7 3 6
PRODUCT TYPE 0 0 X

TOUTE COMMUNICATION OU REPRODUCTION DE CE DOCUMENT, TOUTE EXPLOITATION OU COMMUNICATION DE SON CONTENU NE SONT PAS AUTORISES SAUF AUTORISATION ECRITE. TOUS DROITS DE PROPRIETE INDUSTRIELLE RESERVES. NOTAMMENT EN MATIERE DE BREVETS ET DE MODELES D'UTILITE.
NON E' PERMESSO DIVULGARE A TERZI O RIPRODURRE QUESTO DOCUMENTO, NE UTILIZZARE IL CONTENUTO O RENDERLO COMUNQUE ACCESSIBILE A TERZI. SONO RISERVATI I DIRITTI DI PROPRIETA' INDUSTRIALE, IN PARTICOLARE DI BREVETTO O MODELLO DI UTILITA'.
NOT ALLOWED TO PASS ON TO THIRDS OR MAKE THIS DOCUMENT, AND GIVING IT TO THIRDS AND THE USE OF COMMUNICATION OF THE CONTENTS THEREOF, NOR MAKE IT ACCESSIBLE TO THIRDS. ALL RIGHTS RESERVED, IN PARTICULAR THE RIGHTS OF PATENT OR REGISTRATION OF A UTILITY MODEL OR DESIGN.
THIS DOCUMENT IS THE SUBJECT OF COPYRIGHT.