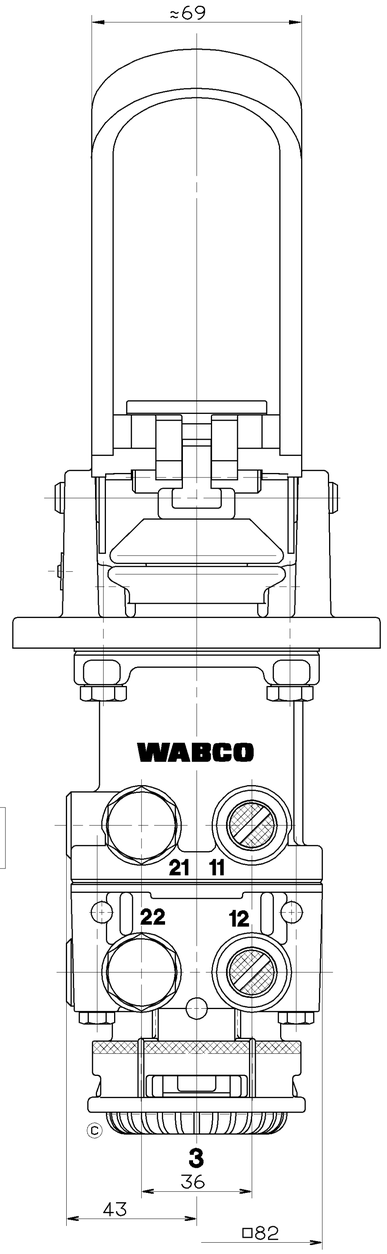

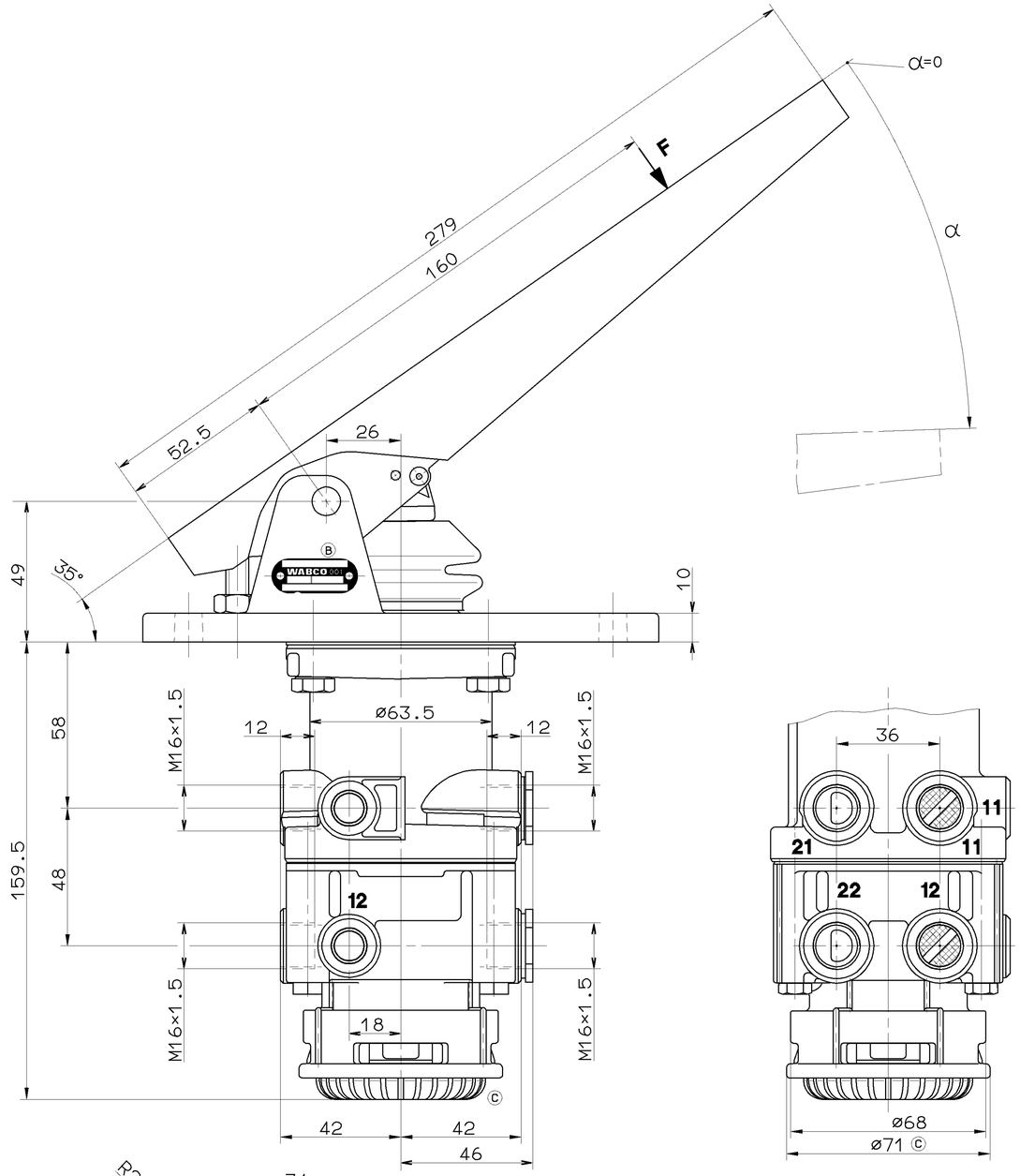

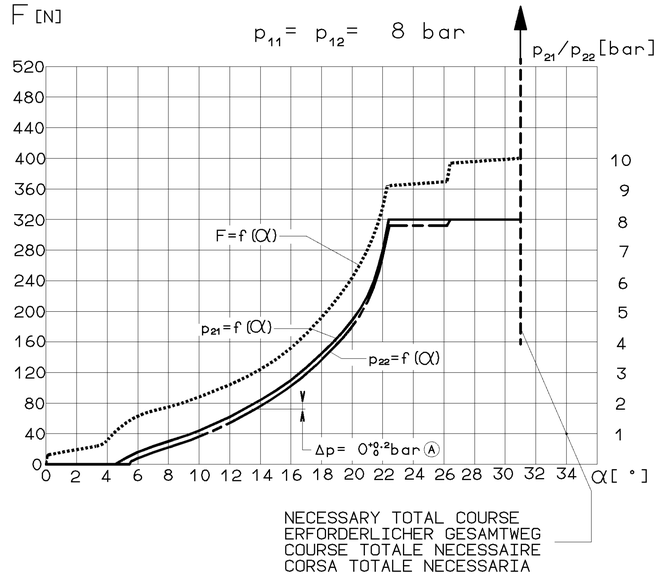

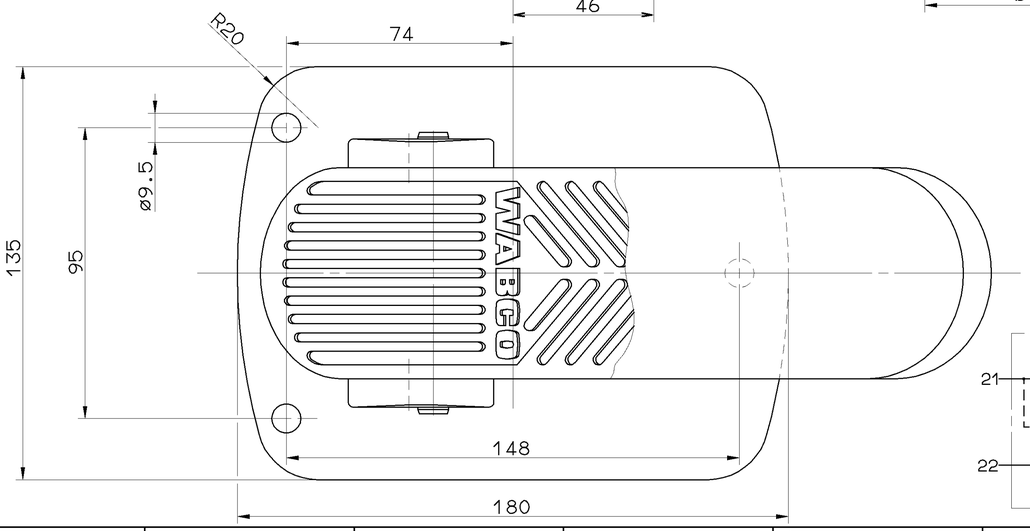

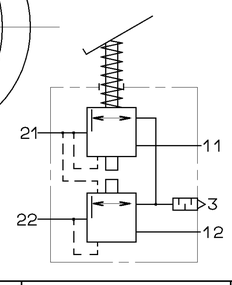

11/12	SUPPLY VORRAT ALIMENTATION ALIMENTAZIONE	21/22	OUTLET AUSGANG SORTIE USCITA
3	EXHAUST ENTLUEFTUNG ECHAPPEMENT SCARICO		

MEDIUM:AIR
MEDIUM:LUFT
FLUIDE:AIR
FLUIDO:ARIA

NOMINAL DIAMETER
NENNWEITE
DIAMETRE NOMINAL
DIAMETRO NOMINALE
: 78.5 mm² ≙ø10mm

WORKING PRESSURE
BETRIEBSDRUCK
PRESSION D UTILISATION : p_e = MAX.8.5 bar
PRESSIONE DI ESERCIZIO

(TEMPORARILY
(KURZZEITIG
(DE COURTE DUREE : p_e = MAX.10 bar)
(BREVE TEMPO SOLO

THERMAL RANGE OF APPLICATION
THERM. ANWENDUNGSBEREICH
GAMME D APPLICATION THERMIQUE : -40°C...+80°C
CAMPO CI APPLICAZIONE TERMICA

INSTALLATION POSITION: EXHAUST SHOWN AT BASE (AXIS CENTRE OF THE DEVICE DEVIATES MAX. 45° FROM VERTICAL)
EINBAULAGE: ENTLUEFTUNG NACH UNTEN (MITTELACHSE DES GERAETES MAX. 45° VON DER SENKRECHTEN ABWEICHEND)
POSITION D'INSTALLATION: ECHAPPEMENT VERS LE BAS (ECART DE L'AXE MEDIAN DE L' APPAREIL PAR RAPPORT A LA RAPPORT A LA VERTICALE: MAX. 45°)
POSIZIONE DI MONTAGGIO: SCARICO VERSO IL BASSO (DEVIAZIONE ASSE APPARECCHIO RISPETTO ALLA VERTICALE: MAX. 45°)

TORQUE FOR CONNECTIONS:
ANZUGSMOMENT FUER EINSCHRAUBSTUTZEN: M16×1.5: M=MAX. 34 Nm
COUPLE DE SERRAGE DES RACCORDS:
COPPIA DI SERRAGGIO DEI RACCORDI:

GENERAL SPECIFICATION: JED-334
FURTHER TECHNICAL DATA:
DOC. CODE: SHEET: TO

GENERAL TOLERANCES

CLASS 1)		RANGE OF NOMINAL DIMENSIONS (± mm) ≤50	>50 ≤180	>180 ≤400	>400	∢
FINE		0,5	1,0	1,5	2,0	
MEDIUM	X	1,0	2,0	3,0	4,0	± 3°
COARSE		2,0	3,5	5,0	6,5	

TAPPED HOLES ACC. ISO 4039 / JED-152
1) TOLERANCE CLASS APPLIED CROSSMARKED

DCN-NO.	REV.	DATE
069704	3×C	98-11-30
062494	1×B	98-09-28
057992	1×A	96-10-10

CADAM-DRAWING COPYRIGHT

DATE	SIGNATURE	
DRAWN: 94-05-27	KULERSKY	
CHECKED: 94-05-27	MARTINI	
STANDARDIZATION: 94-05-27	PANTZER	

WABCO

BRAKE VALVE
MOTORWAGEN-BREMSVENTIL
ROBINET DE FREINAGE
DISTRIBUTORE DI COMANDO

MASS	SCALE	PRODUCT IDENTIFICATION NO.	DOC. CODE	SHEET
2.6 KG	1:1	461 317 001 0	605	1/1
SIZE A 1	T.R.I. 140		SHAPE CODE	REPLACEMENT FOR

100mm

EXPERT CODE 7 3 6

PRODUCT TYPE 0 0 X

TOUTE COMMUNICATION OU REPRODUCTION DE CE DOCUMENT, TOUTE EXPLOITATION OU COMMUNICATION DE SON CONTENU NE SONT PAS AUTORISES SAUF AUTORISATION ECRITE. TOUS DROITS DE PROPRIETE INTELLECTUELLE RESERVES. NON E PERMESSO CONSEGNARE A TERZI O RIPRODURRE QUESTO DOCUMENTO, NE UTILIZZARE IL CONTENUTO O RENDERLO COMUNICARE AD ALTRI AL DI FUORI DELLA SUA DESTINAZIONE. TUTTI I DIRITTI DI PROPRIETA INTELLETTUALE SONO RISERVATI. NO ESTA PERMITIDO ENTREGAR A TERCEROS, NI REPRODUCIR ESTE DOCUMENTO, NI UTILIZAR EL CONTENIDO O COMUNICARLO A OTRAS PERSONAS FUERA DEL ALCANCE DE SU DESTINO. TODOS LOS DERECHOS DE PROPIEDAD INTELECTUAL ESTAN RESERVADOS. NEM É PERMITIDO ENTREGAR A TERCEIROS, REPRODUZIR, UTILIZAR OU COMUNICAR O CONTEÚDO DO PRESENTE DOCUMENTO FORA DO SEU ESCOPO. TODOS OS DIREITOS DE PROPRIEDADE INTELECTUAL SÃO RESERVADOS. NIET IN HET GEHEEL OF GEDEELTELIJK MOGEN DEZE GEGEVENS AAN DERDEN WORDEN VERSTREKT, NOCH WORDEN GEBRUIKT OF BEKEND GEMAAKT, TENZIJ DIT UITDRUKKELIJK IS TOEGESTAAN. ALLE RECHTEN VOOR EIGEN INTELLECTUELE EIGENDOM ZIJN VOORBEHOUDEN. ÄNDERUNGEN VORBEHALTEN. WITHOUT OUR WRITTEN PERMISSION THIS DOCUMENT MAY NOT BE PASSED ON TO THIRD PARTIES OR REPRODUCED, NOR MAY ITS CONTENTS BE EXPLOITED OR DISCLOSED EXCEPT FOR PROPER PURPOSES. ALL RIGHTS RESERVED. SUBJECT TO TECHNICAL MODIFICATIONS. THIS DOCUMENT IS THE SUBJECT OF COPYRIGHT, PATENT OR REGISTRATION OF A UTILITY MODEL OR DESIGN.