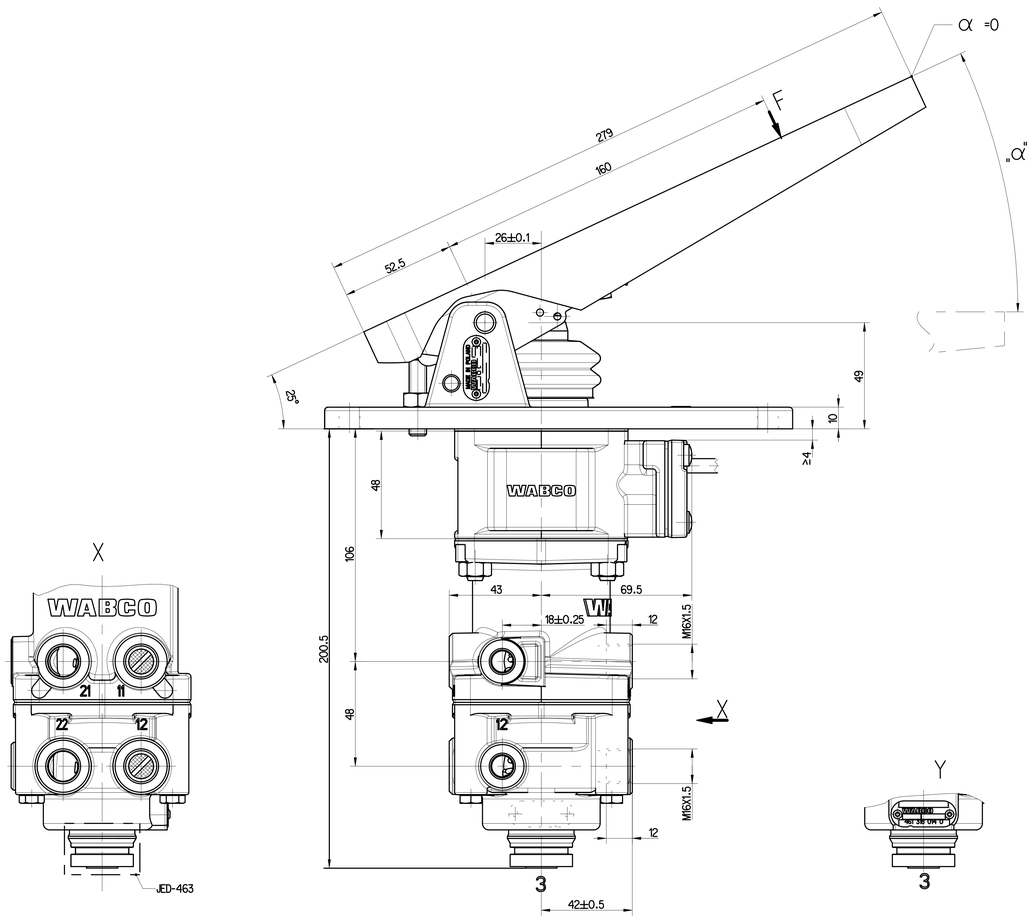

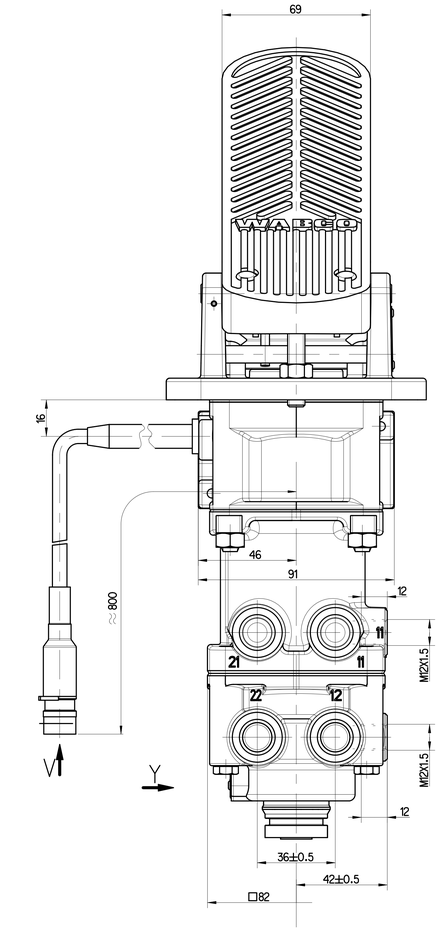

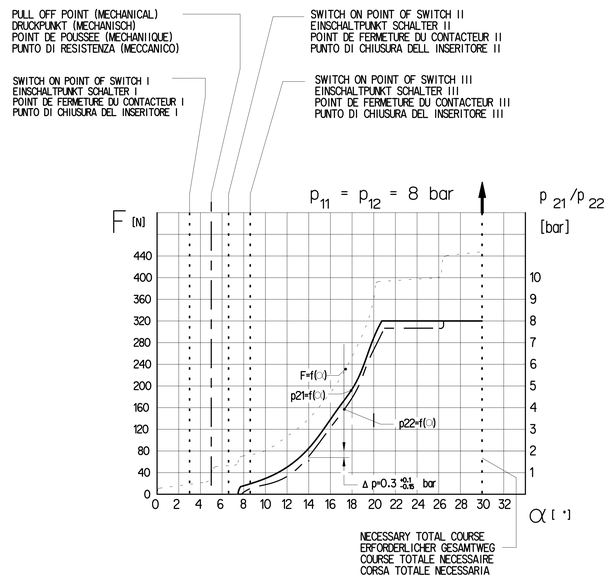

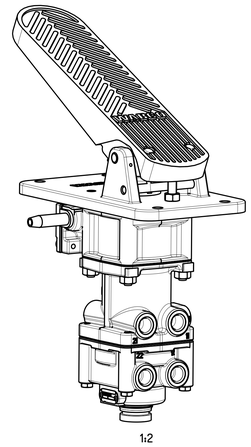

11/12	SUPPLY VORRAT ALIMENTATION ALIMENTAZIONE	21/22	OUTLET AUSGANG SORTIE USCITA	3	EXHAUST ENTLUEFTUNG ECHAPPEMENT SCARICO

MEDIUM: AIR
MEDIUM: LUFT
FLUIDE: AIR
FLUIDO: ARIA

NOMINAL DIAMETER :
NENNWEITE :
DIAMETRE NOMINAL :
DIAMETRO NOMINALE: 78.5 mm² ≙ Ø10 mm

WORKING PRESSURE :
BETRIEBSDRUCK :
PRESSION D UTILISATION :
PRESSIONE DI ESERCIZIO : p_B = MAX. 8.5 bar

(TEMPORARILY :
(KURZZEITIG : p_B = MAX. 10 bar)
(DE COURTE DUREE :
(BREVE TEMPO SOLO :

THERMAL RANGE OF APPLICATION :
THERM. ANWENDUNGSBEREICH : -40°C . . . +80°C
GAMME D'APPLICATION THERMIQUE:
CAMPO DI APPLICAZIONE TERMICA:

TORQUE FOR CONNECTIONS:
ANZUGSMOMENT FUER EINSCHRAUBSTUTZEN: M12X1.5: M=MAX. 21 Nm
COUPLE DE SERRAGE DES RACCORDS: M16X1.5: M=MAX. 34 Nm
COPPIA DI SERRAGGIO DEI RACCORDI:

SWITCH LOAD I, II, III : AT 24 V -1 A (INDUCTIVE LOAD)
SCHALTERBELASTUNG I, II, III : BEI 24 V - 1 A (INDUKTIVE LAST)
CHARGE DU CONTACTEUR I, II, III : A 24 V - 1 A (CHARGE INDUCTIVE)
CARICO DELL INSERITORE I, II, III : A 24 V - 1 A (CARICO INDUTTIVO)

INSTALLATION POSITION : EXHAUST SHOWN AT BASE (AXIS CENTRE OF THE DEVICE DEVIATES MAX. 45° FROM VERTICAL)
EINBAULAGE : ENTLUEFTUNG NACH UNTEN (MITTELACHSE DES GERAETES MAX. 45° VON DER SENKRECHTEN ABWEICHEND)
POSITION D'INSTALLATION: ECHAPPEMENT VERS LA BAS (ECART DE L' AXE MEDIAN DE L'APPAREIL PAR RAPPORT A LA RAPPORT A LA VERTICALS: 45° MAX.)
POSIZIONE DI MONTAGGIO : SCARICO VERSO IL BASSO (DEVIAZIONE ASSE APPARECCHIO RISPETTO ALLA VERTICALE: MAX. 45°)

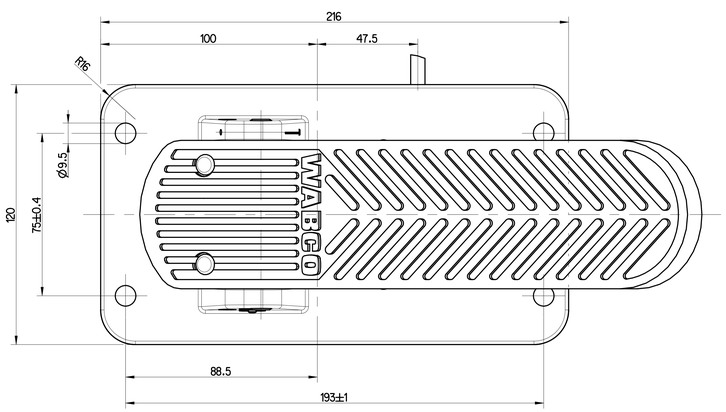

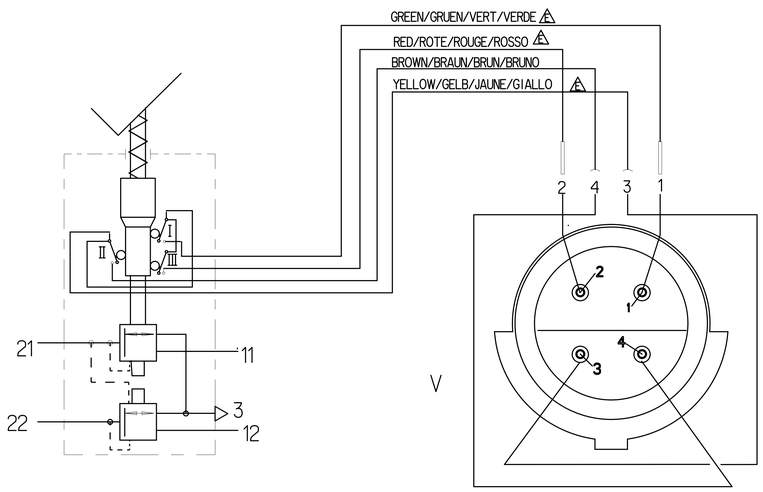

General Specifications ISO 8015, JED-334-1, Size ISO 14405 LP
Further Technical Data:461 318 014 0
Doc. Code:035 Sheet: 1 To

General Tolerances JED-261

Class		Range of nominal dimensions in mm				
		≤ 50	> 50 ≤ 180	> 180 ≤ 400	> 400	
Fine		±0.5	±1	±1.5	±2	±3°
Medium	X	±1	±2	±3	±4	
Coarse		±2	±3.5	±5	±6.5	

Tapped Holes acc. ISO 4029 /JED-152
Tolerance Class Applied Crossmarked

Copyright ZF®

Date	Signature
2024-03-21	Valsdkh (Drawn)
2024-03-21	MUTHU (Checked)

Dimensions in mm
Material No.

BRAKE VALVE
MOTORWAGEN-BREMSVENTIL
ROBINET DE FREINAGE
DISTRIBUTORE DI COMANDO

Mass	Scale	Date of first issue: -
≈3.6 kg	1:1 / 1:2	461 318 014 0
Size	CAD System	
A 0	CREO	

Doc.Code	Language	Sheet
005	ML	1/1

Size	ECN-No.	Revision	Techn. Resp.	Replacement for
A 0	514297	4 X E	5182	-

100mm

Diese Dokumentation ist vertraulich zu behandeln. Jede Verwendung oder Mitteilung, die nicht ausdrücklich gestattet ist, ist untersagt. Zuwiderhandlungen verpflichten zu Schadensersatz. Alle Rechte vorbehalten, insbesondere für den Fall der Patenterteilung oder der Eintragung eines Gebrauchsmusters.
Reproduction, distribution and use of this document as well as the communication of its contents to others without express authorization is prohibited. Offenders will be held liable for payment of damages. All rights are reserved in the event of the grant of a patent or the registration of a utility model or design.
Copyright of this document vest jointly in ZF Friedrichshafen AG and its affiliated companies.
Toute transmission de ce document ainsi que toute utilisation et divulgation de son contenu sont interdites sauf autorisation écrite. Tous droits réservés en cas de délivrance d'un brevet ou d'enregistrement d'un modèle d'utilité ou d'un dessin ou modèle.
Questo documento è riservato. Ogni utilizzo o divulgazione del suo contenuto non autorizzati sono vietati. Si rende tutti gli aventi diritto al risarcimento dei danni. Tutti i diritti sono riservati in caso di rilascio di un brevetto o di registrazione di un modello di utilità o di un disegno o modello.
Copyright of this document is held by ZF Friedrichshafen AG and its affiliated companies.