	MATERIAL	SURFACE PROTECTION		MATERIAL	SURFACE PROTECTION
I	JED-021 M3/Fe	JED-240.2	XV	FE	JED-256/Zn/C
II	JED-106/PVC		XVI	JED-021 M3/Fe	JED-257/Zn/C
III	JED-414/PVC		XVII	JED-049 M/Fe	JED-232.5
IV	JED-029 M1/AL	JED-259/C	XVIII	JED-020 M/Fe	JED-256/Zn/C
V	JED-001 M2/AL	JED-259/C			
VI	JED-001 M3/AL	JED-259/C			
VII	JED-051 M4/Fe	JED-256/Zn/C			
VIII	JED-005 M1/POM				
IX	JED-7080 M/NBR				
X	JED-021 M3/Fe	JED-256/Zn/C			
XI	JED-051 M1/Fe	JED-256/Zn/C			
XII	JED-022 M3/Fe	JED-256/Zn/C			
XIII	PVC				
XIV	PBT 30% GV/BLACK				

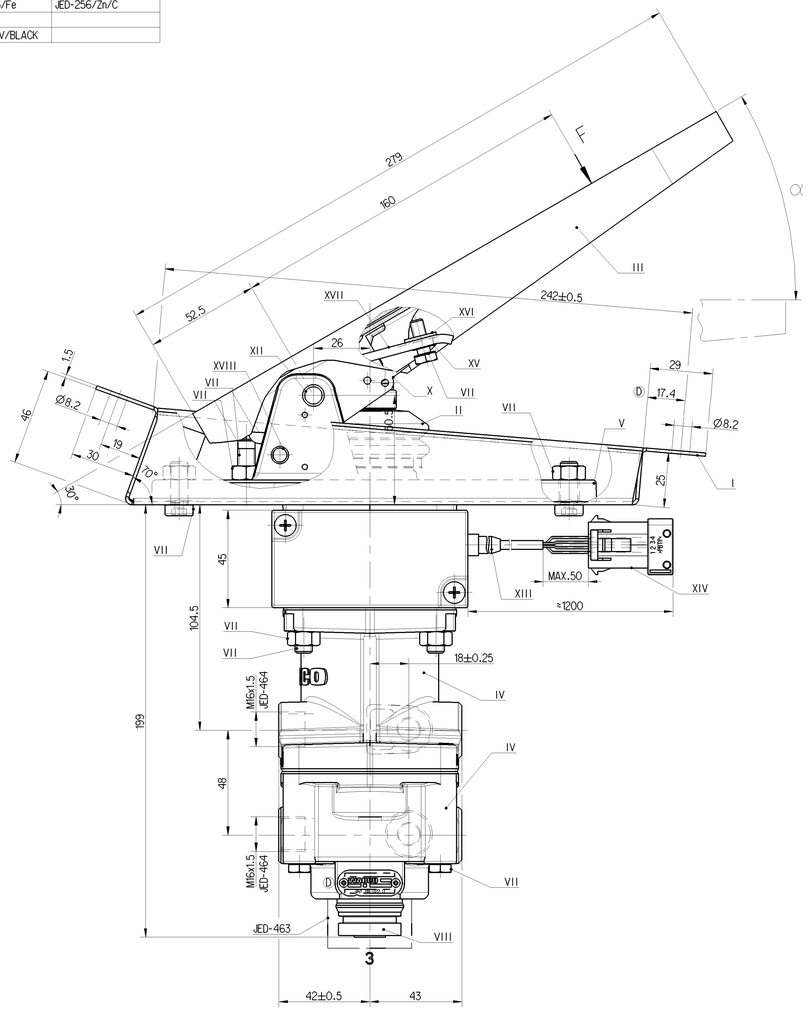

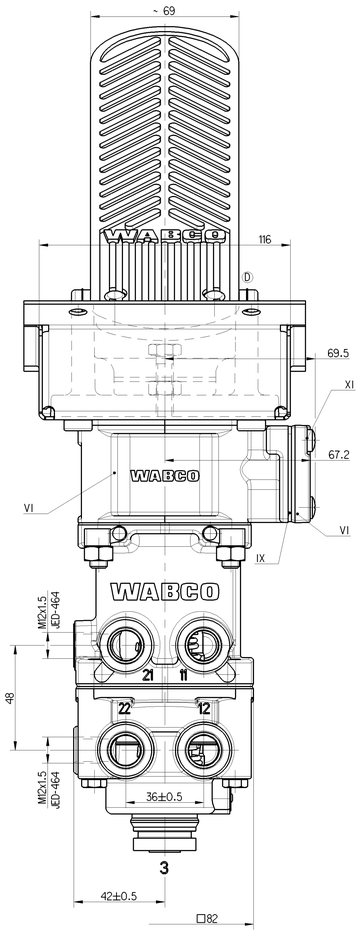

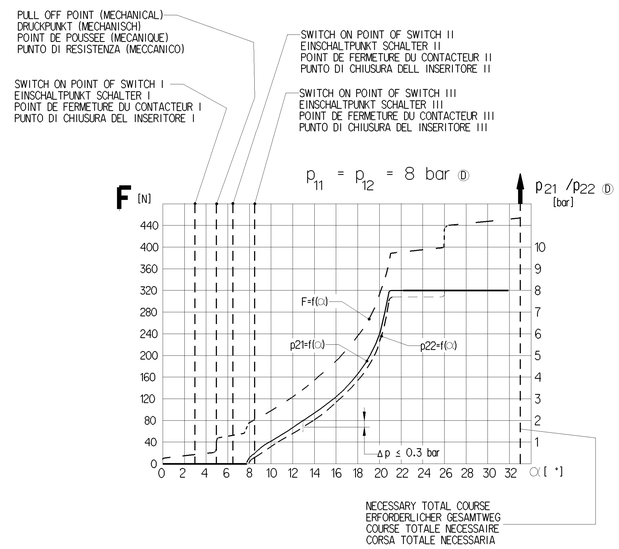

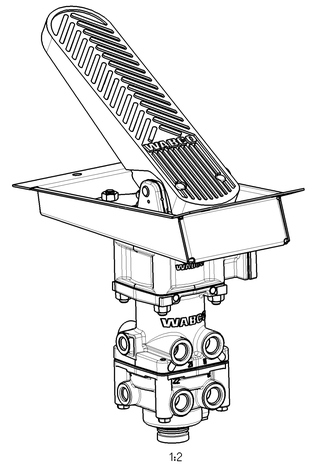

11/12	SUPPLY VORRAT ALIMENTATION ALIMENTAZIONE	21/22	OUTLET AUSGANG SORTIE USCITA	3	EXHAUST ENTLUEFTUNG ECHAPPEMENT SCARICO

MEDIUM: AIR
MEDIUM: LUFT
FLUIDE: AIR
FLUIDO: ARIA

NOMINAL DIAMETER :
NENNWEITE : 78.5 mm² ≙ Ø10mm
DIAMETRE NOMINAL :
DIAMETRO NOMINALE:

WORKING PRESSURE :
BETRIEBSDRUCK : p_e = MAX. 8.5 bar
PRESSION D'UTILISATION :
PRESSIONE DI ESERCIZIO :

(TEMPORARILY :
(KURZZEITIG : p_e = MAX. 10 bar)
(DE COURTE DUREE :
(BREVE TEMPO SOLO :

THERMAL RANGE OF APPLICATION :
THERM. ANWENDUNGSBEREICH : -40°C . . . +80°C
GAMME D'APPLICATION THERMIQUE :
CAMPO DI APPLICAZIONE TERMICA :

INSTALLATION POSITION: EXHAUST SHOWN AT BASE (AXIS CENTRE OF THE DEVICE DEVIATES MAX. 45° FROM VERTICAL)
EINBAULAGE: ENTLUEFTUNG NACH UNTEN (MITTELACHSE DES GERAETES MAX. 45° VON DER SENKRECHTEN ABWEICHEND)
POSITION D'INSTALLATION: ECHAPPEMENT VERS LA BAS (ECART DE L'AXE MEDIAN DE L'APPAREIL PAR RAPPORT A LA VERTICALE: 45° MAX.)
POSIZIONE DI MONTAGGIO: SCARICO VERSO IL BASSO (DEVIAZIONE ASSE APPARECCHIO RISPETTO ALLA VERTICALE: MAX. 45°)

TORQUE FOR CONNECTIONS:
ANZUGSMOMENT FUER EINSCHRAUBSTUTZEN: M12X1.5: M=MAX. 21 Nm
COUPLE DE SERRAGE DES RACCORDS: M16X1.5: M=MAX. 34 Nm
COPPIA DI SERRAGGIO DEI RACCORDI:

MAX. SWITCH LOAD I, II, III : AT 24 V - 200 mA (RESISTIVE LOAD)
MAX. SCHALTERBELASTUNG I, II, III : BEI 24 V - 200 mA (OHMSHE BELASTUNG)
CHARGE DU CONTACTEUR MAX. I, II, III : A 24 V - 200 mA (CHARGE OHMIQUE)
CARICO DELL INSERITORE MAX. I, II, III : A 24 V - 200 mA (CARICO OHMICO)

SWITCH LOAD I, II, III : AT 24 V -1..10 mA (RESISTIVE LOAD)
SCHALTERBELASTUNG I, II, III : BEI 24 V - 1..10 mA (OHMSHE BELASTUNG)
CHARGE DU CONTACTEUR I, II, III : A 24 V - 1..10 mA (CHARGE OHMIQUE)
CARICO DELL INSERITORE I, II, III : A 24 V - 1..10 mA (CARICO OHMICO)

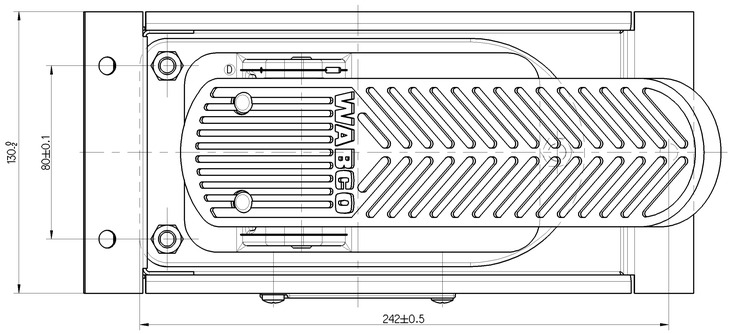

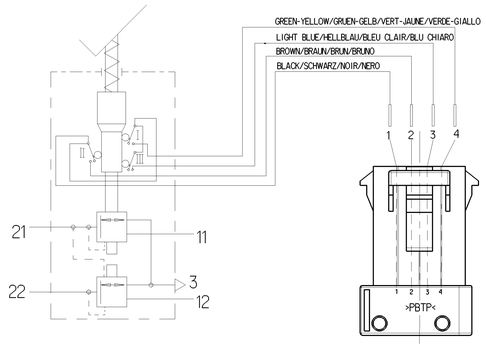

General Specification: JED-334-1 , Size ISO 14405 LP							
Further Technical Data: 461 318 022 0							
Doc. Code: 035				Sheet: 1 To			
General Tolerances JED-261							
		Range of Nominal Dimensions (± mm)					
Class 1)		≥ 50	> 50 ≤ 180 ≤ 80	> 180 ≤ 400	> 400		
Fine		0.5	1.0	1.5	2.0	±3°	
Medium	X	1.0	2.0	3.0	4.0		
Coarse		2.0	3.5	5.0	6.5		
Tapped Holes acc.: ISO 4029, JED-152							
1) Tolerance Class Applied: Crossmarked							

Copyright WABCO®

Date	Signature	Drawn	
2015-06-04		RAJASEKARAN	
2015-12-21		Checked: Adamski	
		Liaert: Adamski	

WABCO

BRAKE VALVE
MOTORWAGEN-BREMSVENTIL
ROBINET DE FREINAGE
DISTRIBUTORE DI COMANDO

26/30®

Mass	Scale	Material No.	Date of first issue		
≈4.2 kg	1:1 1:2	461 318 022 0	Doc.Code 005	Language ML	Sheet 1/1
Size A 0	CAD System CREO	ECN No. 165931	Revision 7 0	Techn. Repr. 5182	Replacement for -

100mm