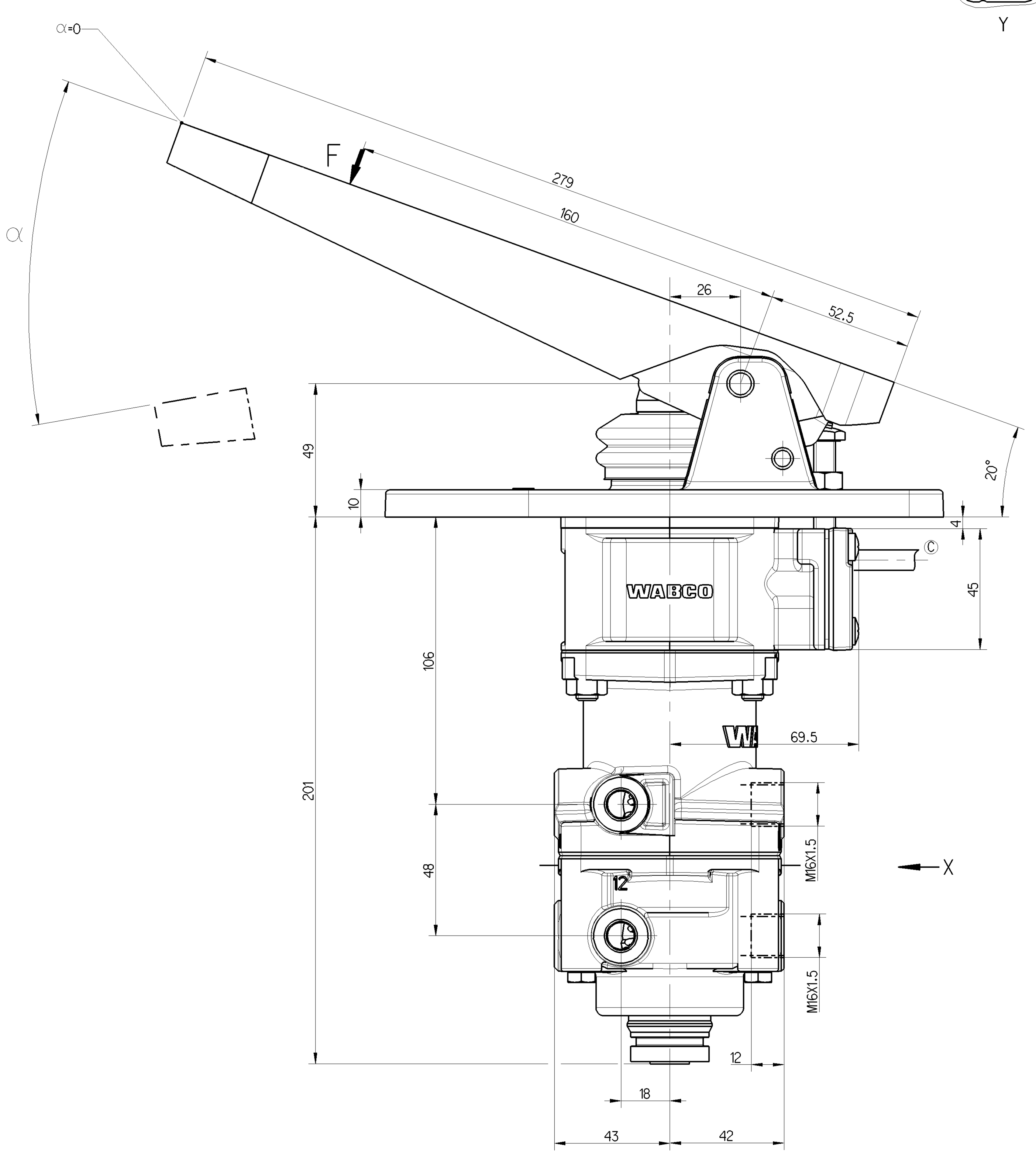

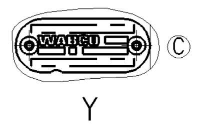

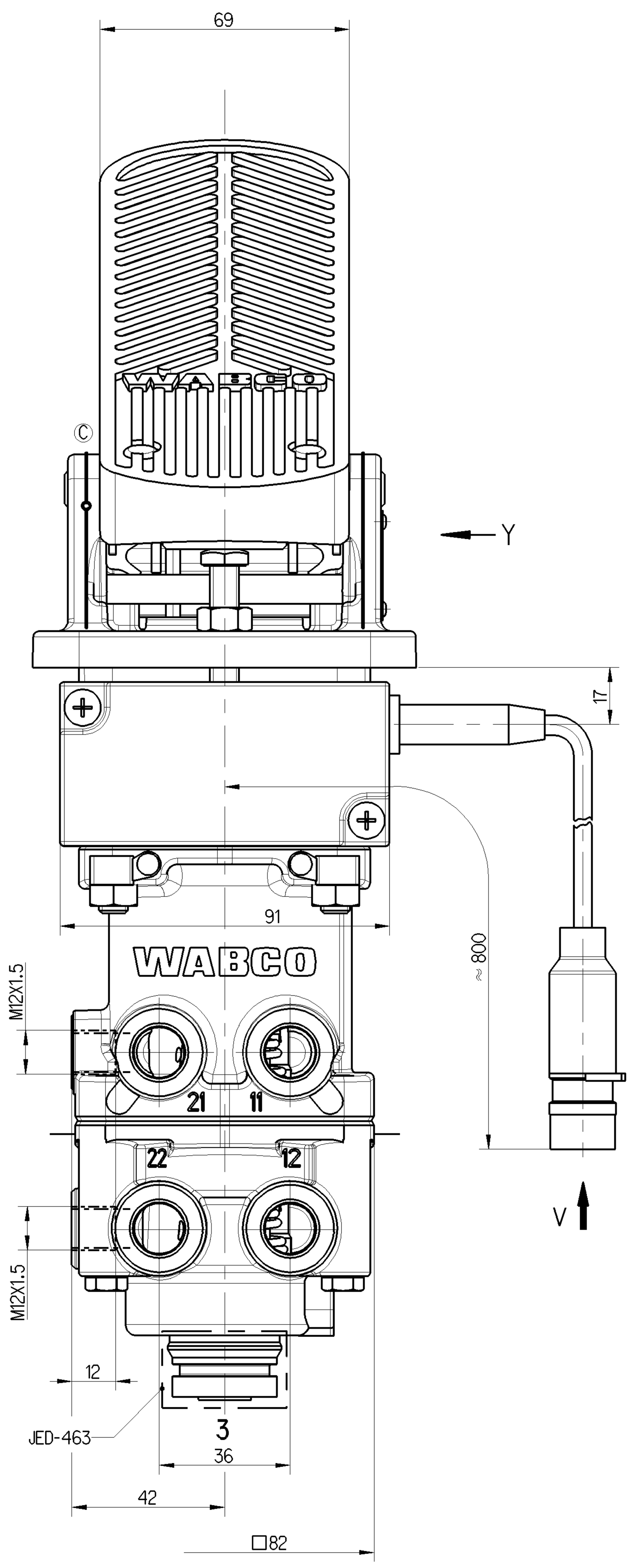

VIEW X

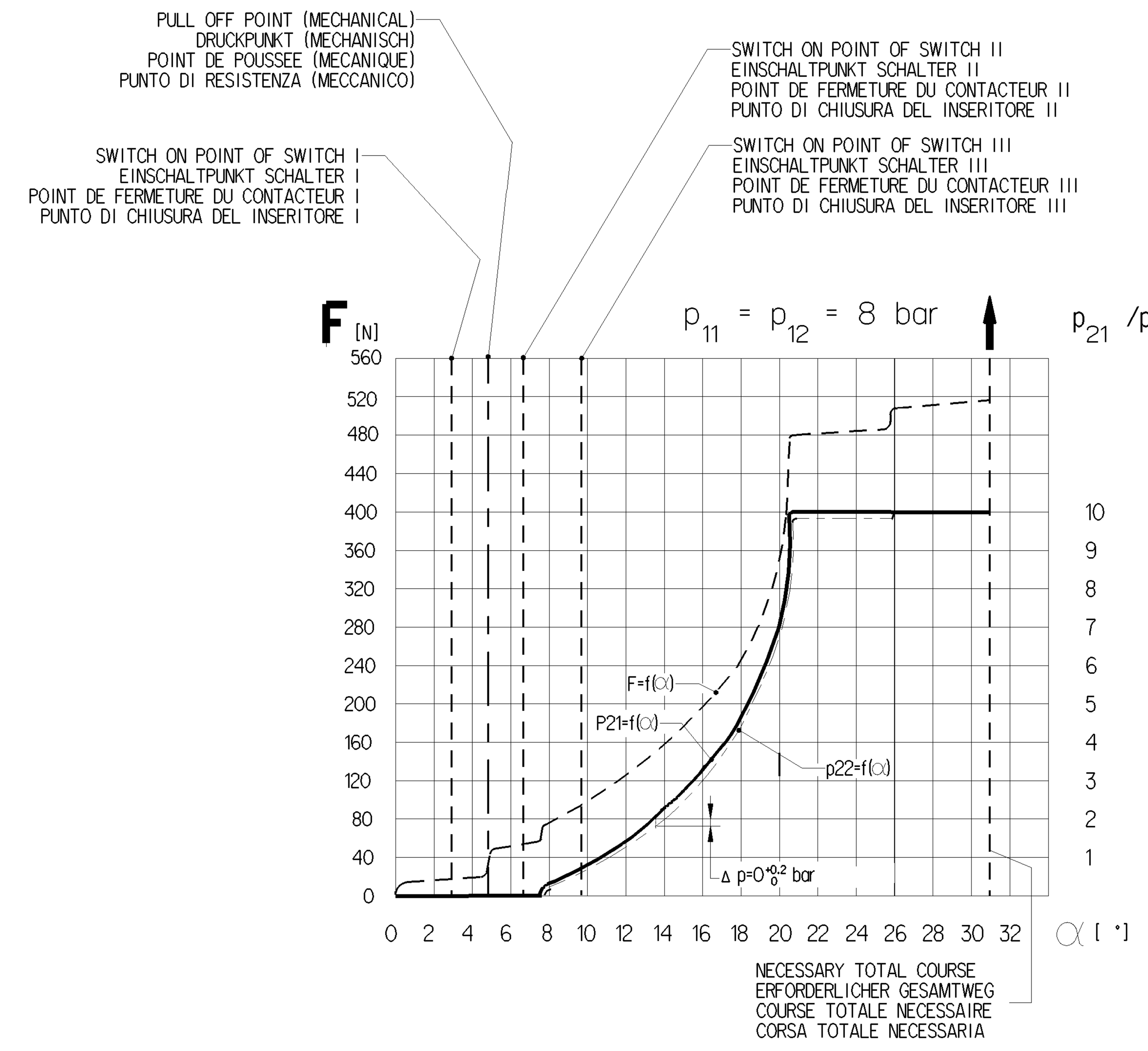

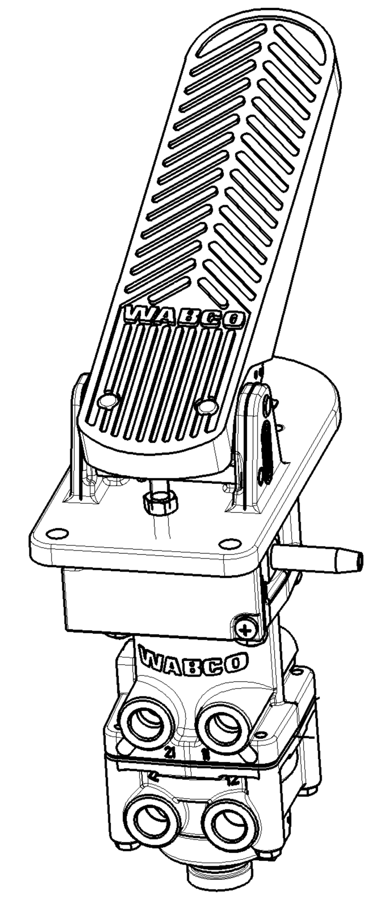

1:2

11/12	SUPPLY VORRAT ALIMENTATION ALIMENTAZIONE	21/22	OUTLET AUSGANG SORTIE USCITA	3	EXHAUST ENTLUEFTUNG ECHAPPEMENT SCARICO

MEDIUM: AIR
MEDIUM: LUFT
FLUIDE: AIR
FLUIDO: ARIA

NOMINAL DIAMETER :
NENNWEITE : 78.5 mm² ≙ Ø10 mm
DIAMETRE NOMINAL :
DIAMETRO NOMINALE:

WORKING PRESSURE :
BETRIEBSDRUCK : p_e =MAX. 10 bar
PRESSION D'UTILISATION :
PRESSIONE DI ESERCIZIO :

(TEMPORARILY :
(KURZZEITIG : p_e =MAX. 11 bar)
(DE COURTE DUREE :
(BREVE TEMPO SOLO :

THERMAL RANGE OF APPLICATION :
THERM. ANWENDUNGSBEREICH : -40°C . . . +80°C
GAMME D'APPLICATION THERMIQUE:
CAMPO DI APPLICAZIONE TERMICA:

INSTALLATION POSITION: EXHAUST SHOWN AT BASE (AXIS CENTRE OF THE DEVICE DEVIATES MAX. ±45° FROM VERTICAL)
EINBAULAGE: ENTLUEFTUNG NACH UNTEN (MITTELACHSE DES GERAETES MAX. ±45° VON DER SENKRECHTEN ABWEICHEND)
POSITION D'INSTALLATION: ECHAPPEMENT VERS LA BAS (ECART DE L'AXE MEDIAN DE L'APPAREIL PAR RAPPORT A LA VERTICALE: ±45° MAX.)
POSIZIONE DI MONTAGGIO: SCARICO VERSO IL BASSO(DEVIAZIONE ASSE APPARECCHIO RISPETTO ALLA VERTICALE: MAX. ±45°)

SWITCH LOAD I, II, III : AT 24 V -1 A (INDUCTIVE LOAD)
SCHALTERBELASTUNG I, II, III : BEI 24 V - 1 A (INDUKTIVE LAST)
CHARGE DU CONTACTEUR I, II, III : A 24 V - 1 A (CHARGE INDUCTIVE)
CARICO DELL INSERITORE I, II, III : A 24 V - 1 A (CARICO INDUTTIVO)

TORQUE FOR CONNECTIONS:
ANZUGSMOMENT FUER EINSCHRAUBSTUTZEN:
COUPLE DE SERRAGE DES RACCORDS:
COPPIA DI SERRAGGIO DEI RACCORDI:

M16x1.5: M=MAX. 34 Nm
M12x1.5: M=MAX. 21 Nm

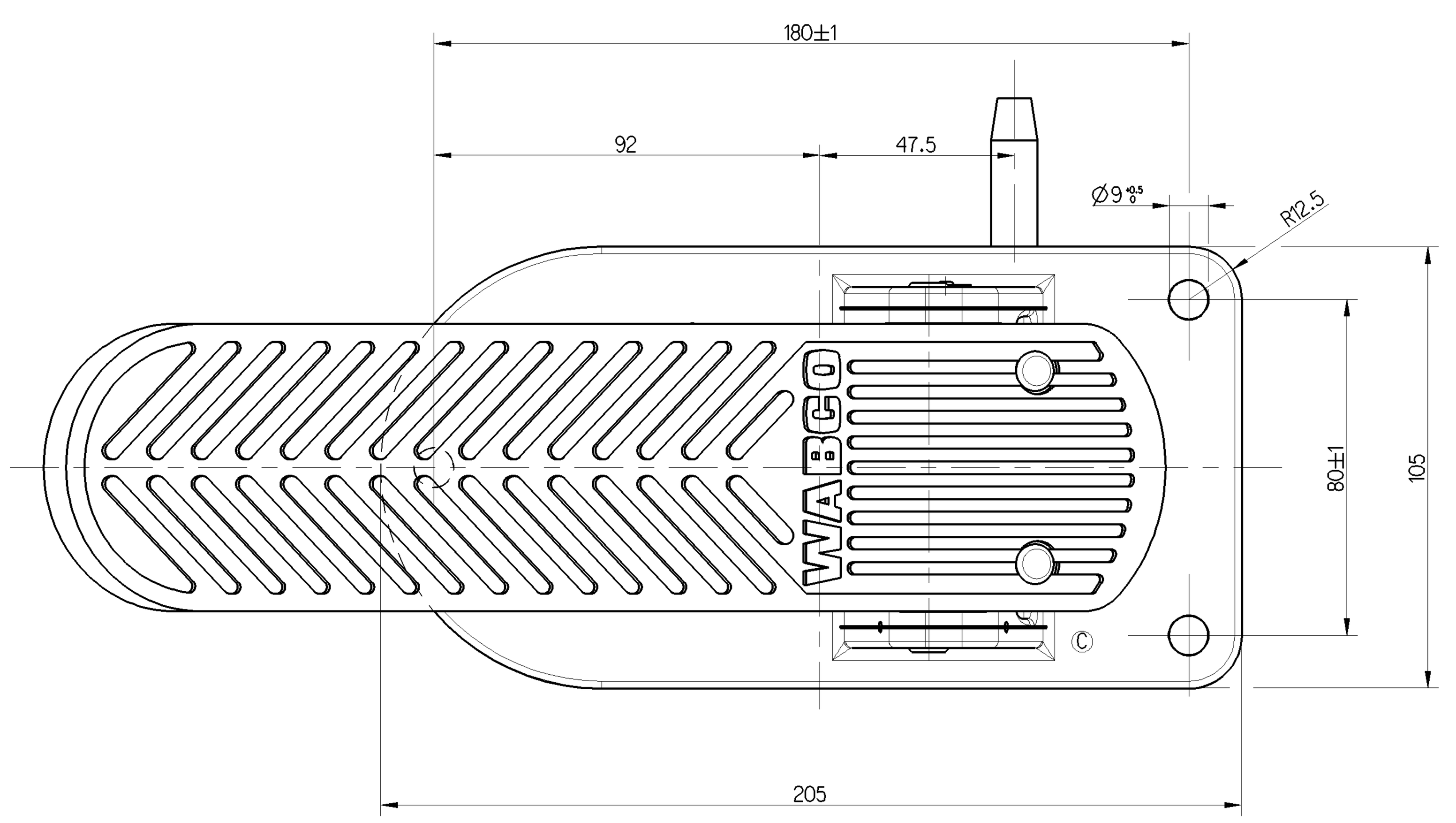

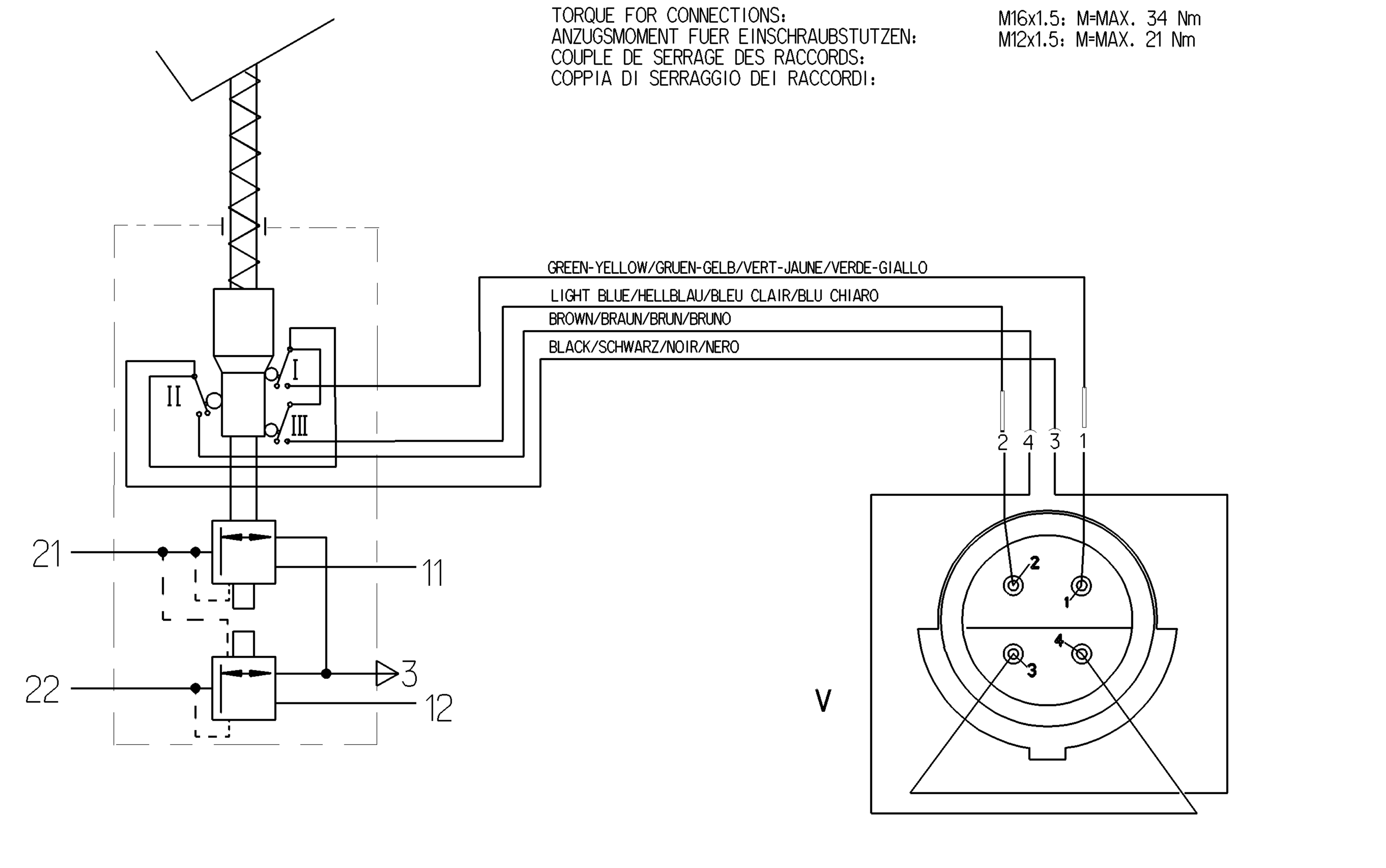

General Specification: JED-334-1 , Size ISO 14405 LP							
Further Technical Data: 461 318 025 0							
Doc. Code: 035			Sheet: 1 To				
General Tolerances JED-261							
		Range of Nominal Dimensions (± mm)					
Class	1)	≤ 50	> 50 ≤ 180	> 180 ≤ 400	> 400	∢
Fine		0.5	1.0	1.5	2.0	
Medium	X	1.0	2.0	3.0	4.0	±3°
Coarse		2.0	3.5	5.0	6.5	
Tapped Holes acc. ISO 4039 / JED 152							
1) Tolerance Class Applied Crossmarked							

Copyright WABCO®		WABCO			
Date	Signature	BRAKE VALVE MOTORWAGEN-BREMSVENTIL ROBINET DE FREINAGE DISTRIBUTORE DI COMANDO			26/20°
Drawn					
2015-07-23	RAJASEKARAN				
Checked					
2015-12-21	Adamski				
Expert					
ADAMSKI					
Mass	Scale	Material No.	Date of first issue:		
≈3.6 KG	1:1 1:2	461 318 025 0	Doc.Code 005	Language ML	Sheet 1/1
Size	CAD System	ECN-No.	Revision	Techn. Resp.	Replacement for
A 0	CREO	165931	5 C	5182	-

100mm

Toute Communication ou reproduction de ce document, toute exploitation ou communication de son contenu sont interdites, sauf autorisation expresse. Tout manquement a cette regle constitue un abus evident et expose son auteur au versement de dommages et interets. Tous droits de propriete industrielle reserves, notamment en matiere de brevets et de modeles.
Weitergabe sowie Vervielfaeltigung dieser Unterlage, Verwertung und Mitteilung ihres Inhalts nicht gestattet, soweit nicht ausdruecklich zugestanden. Zuwiderhandlungen stellen einen offensichtlichen Missbrauch dar und verpflichten zu Schadenersatz. Alle Rechte fuer den Fall der Patenterteilung oder Gebrauchsmuster-Eintragung vorbehalten.
Non e permesso consegnare a terzi o riprodurre questo documento, ne utilizzarne il contenuto o renderlo comunque noto a terzi senza autorizzazione esplicita. Ogni infrazione costituira un evidente abuso e comportera il risar cimento dei danni subiti. E'fatto riserva di tutti i diritti derivanti da brevetti o modelli.
Copying of this document and giving it to others and the use or communication of the contents thereof, are forbidden without express authority. Contravention of this restriction will constitute an evident abuse and result in a liability to the payment of damages. All rights are reserved in the event of the grant of patent or registration of a utility model or design. This document is the subject of copyright.