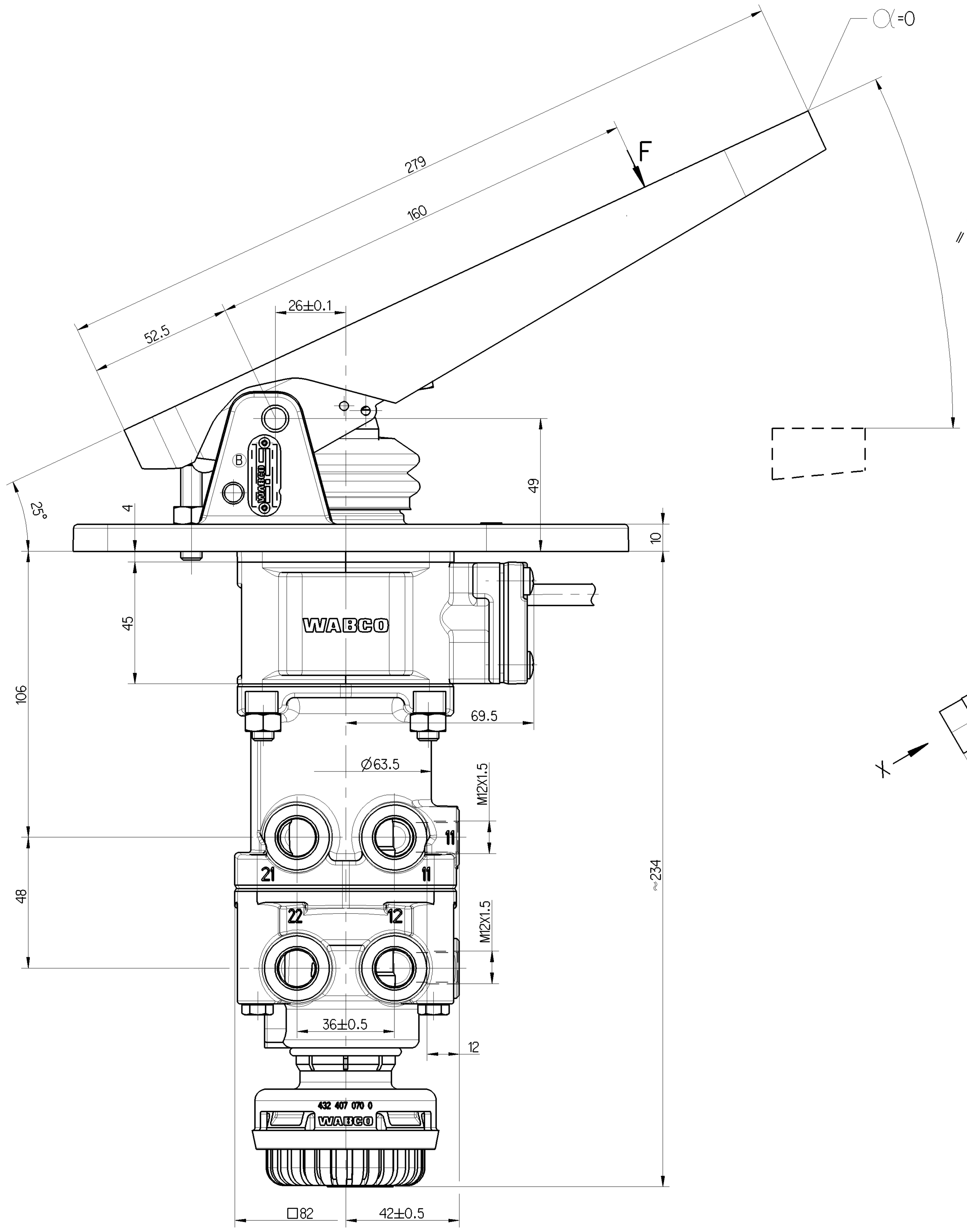

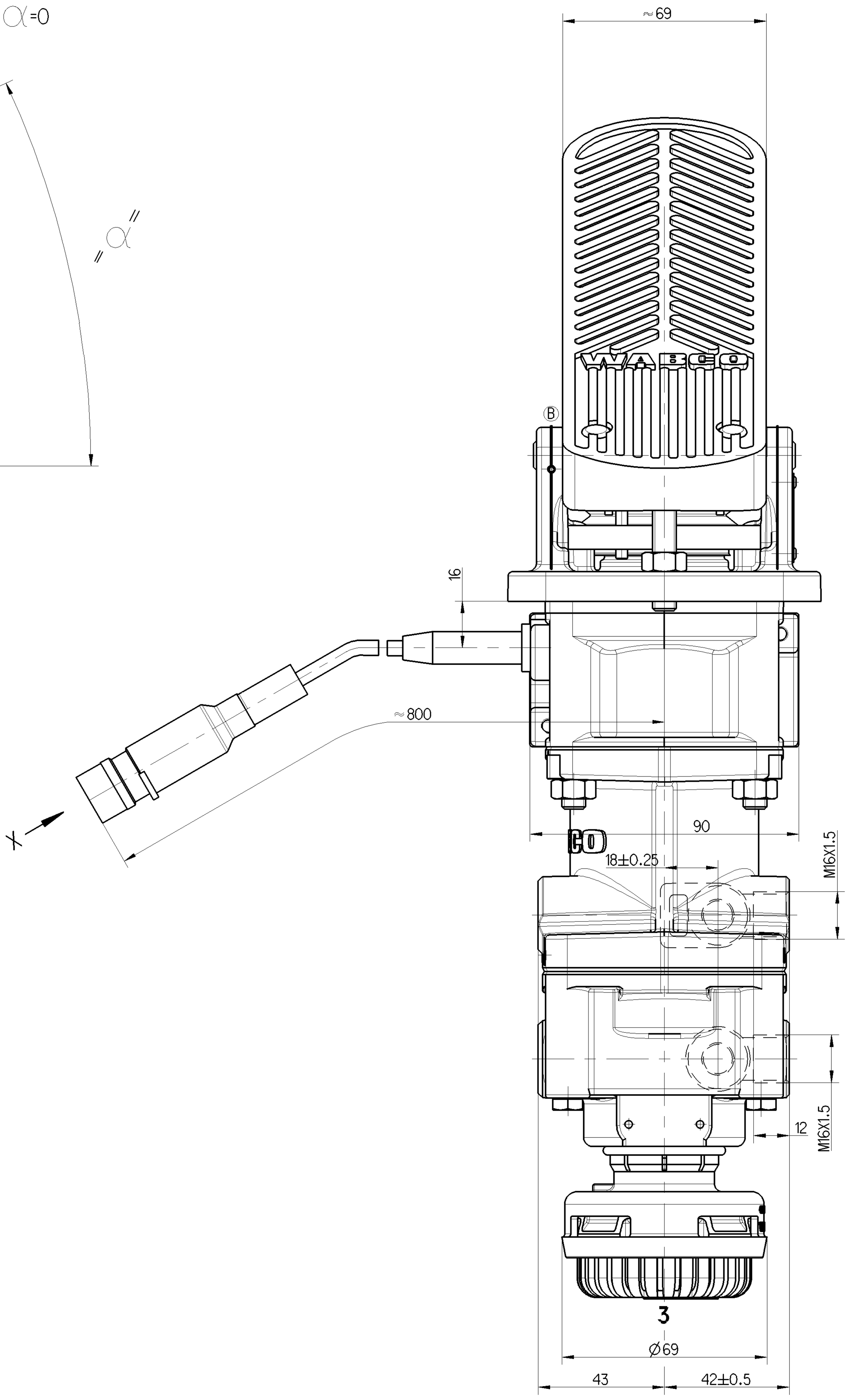

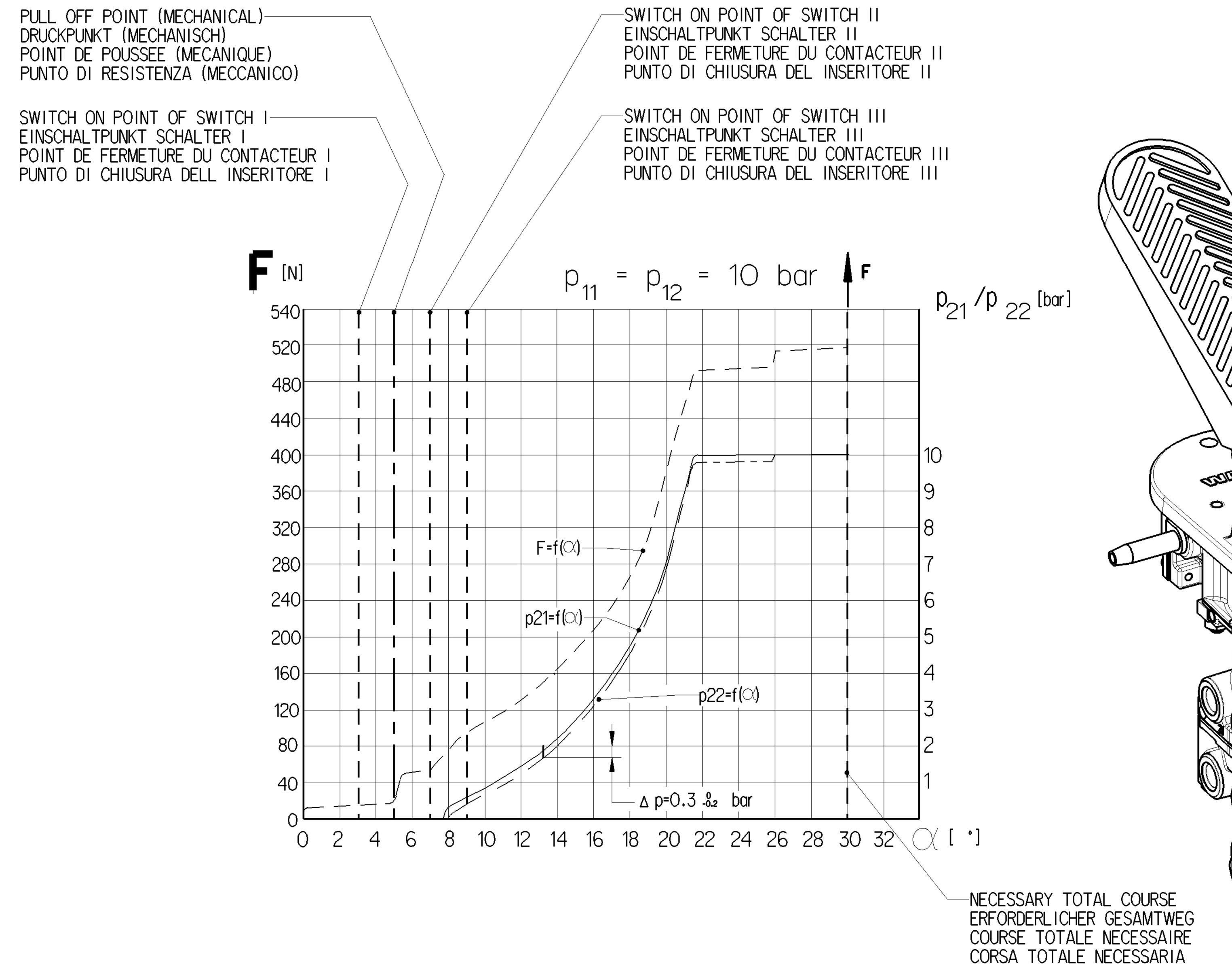

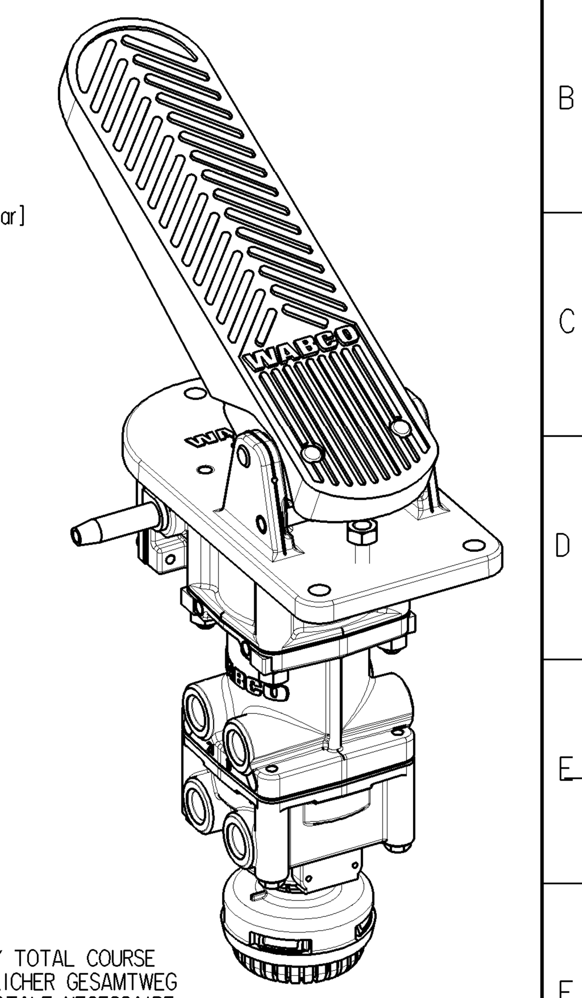

1:2

11/12	SUPPLY VORRAT ALIMENTATION ALIMENTAZIONE	**21/22**	OUTLET AUSGANG SORTIE USCITA	**3**	EXHAUST ENTLUEFTUNG ECHAPPEMENT SCARICO

MEDIUM: AIR
MEDIUM: LUFT
FLUIDE: AIR
FLUIDO: ARIA

NOMINAL DIAMETER :
NENNWEITE : 78.5 mm² ≙ Ø10 mm
DIAMETRE NOMINAL :
DIAMETRO NOMINALE:

WORKING PRESSURE :
BETRIEBSDRUCK : p_e = MAX. 10 bar
PRESSION D'UTILISATION :
PRESSIONE DI ESERCIZIO :

(TEMPORARILY :
(KURZZEITIG : p_e = MAX. 11 bar)
(DE COURTE DUREE :
(BREVE TEMPO SOLO :

SWITCH LOAD I, II, III : AT 24 V -1 A (INDUCTIVE LOAD)
SCHALTERBELASTUNG I, II, III : BEI 24 V - 1 A (INDUKTIVE LAST)
CHARGE DU CONTACTEUR I, II, III : A 24 V - 1 A (CHARGE INDUCTIVE)
CARICO DELL INSERITORE I, II, III : A 24 V - 1 A (CARICO INDUTTIVO)

THERMAL RANGE OF APPLICATION :
THERM. ANWENDUNGSBEREICH : -40 °C . . . +80 °C
GAMME D'APPLICATION THERMIQUE:
CAMPO CI APPLICAZIONE TERMICA:

INSTALLATION POSITION: EXHAUST SHOWN AT BASE (AXIS CENTRE OF THE DEVICE DEVIATES MAX.±45° FROM VERTICAL)
EINBAULAGE: ENTLUEFTUNG NACH UNTEN (MITTELACHSE DES GERAETES MAX. ±45° VON DER SENKRECHTEN ABWEICHEND)
POSITION D'INSTALLATION: ECHAPPEMENT VERS LA BAS (ECART DE L'AXE MEDIAN DE L'APPAREIL PAR RAPPORT A LA VERTICALE: ±45° MAX.)
POSIZIONE DI MONTAGGIO: SCARICO VERSO IL BASSO(DEVIAZIONE ASSE APPARECCHIO RISPETTO ALLA VERTICALE: MAX. ±45°)

TORQUE FOR CONNECTIONS:
ANZUGSMOMENT FUER EINSCHRAUBSTUTZEN : M12X1.5: M=MAX. 21 Nm
COUPLE DE SERRAGE DES RACCORDS: M16X1.5: M=MAX. 34 Nm
COPPIA DI SERRAGGIO DEI RACCORDI:

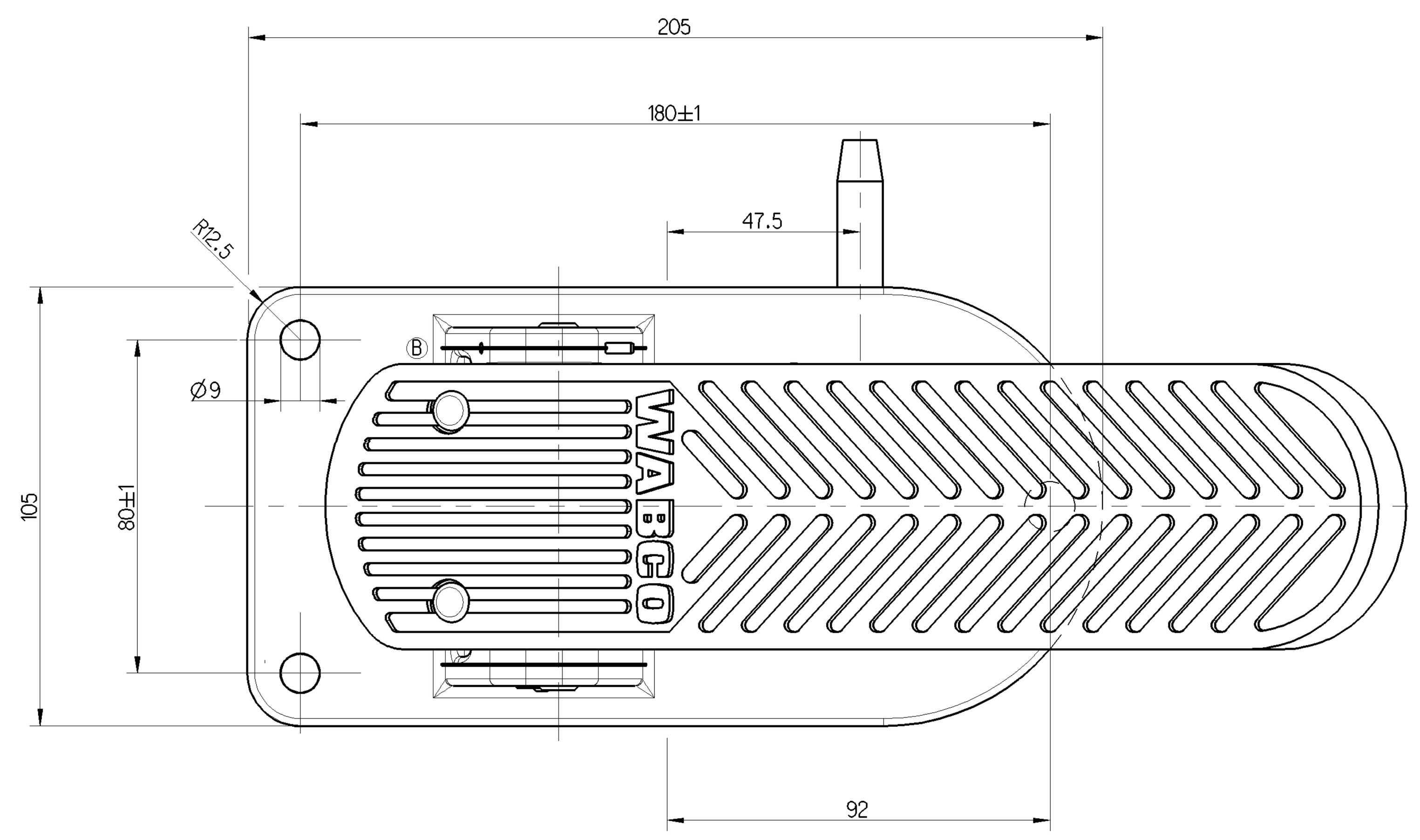

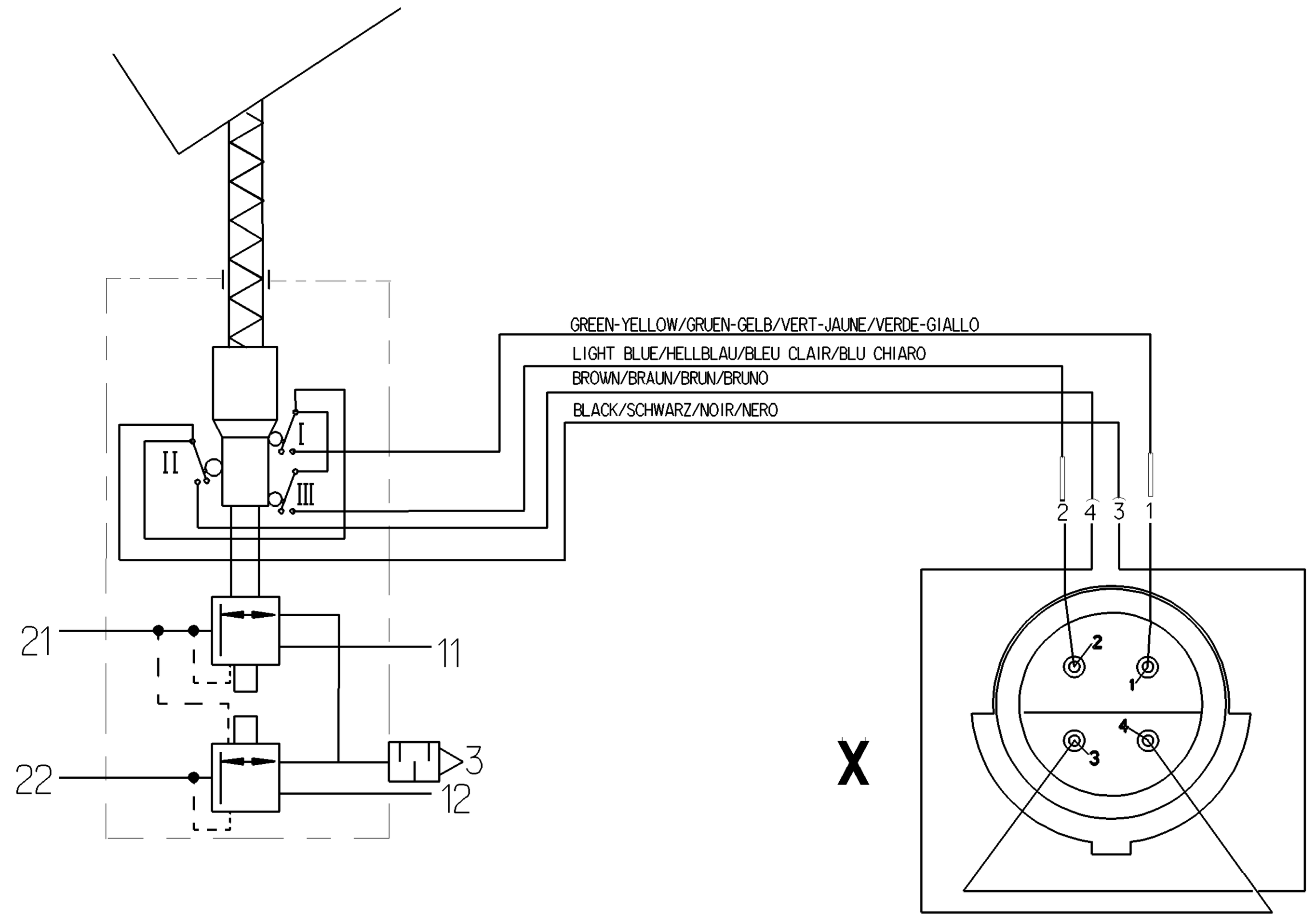

General Specification: JED-334-1 , Size ISO 14405 LP						
Further Technical Data: 461 318 028 0						
Doc. Code: 035			Sheet: 1 To			
General Tolerances JED-261						
		Range of Nominal Dimensions (± mm)				
Class 1)		≤ 50	> 50 ≤ 180	> 180 ≤ 400	> 400	◁
Fine		0.5	1.0	1.5	2.0	
Medium	X	1.0	2.0	3.0	4.0	±3°
Coarse		2.0	3.5	5.0	6.5	
Tapped Holes acc. ISO 4039 / JED-152						
1) Tolerance Class Applied Crossmarked						

Copyright WABCO®		**WABCO**			
Date	Signature	BRAKE VALVE MOTORWAGEN-BREMSVENTIL ROBINET DE FREINAGE DISTRIBUTORE DI COMANDO			26/25°
Drawn					
2016-06-20	RAJASEKARAN				
Checked					
2016-09-24	Kwiecien				
Expert					
Adamski					
Mass	Scale	Material No.	Date of first issue:		
≈3.3 KG	1:1 1:2	461 318 028 0	Doc.Code 005	Language ML	Sheet 1/1
Size	CAD System				
A 0	CREO	ECN-No. 165931	Revision 4 B	Techn. Resp. 5182	Replacement for -

100mm