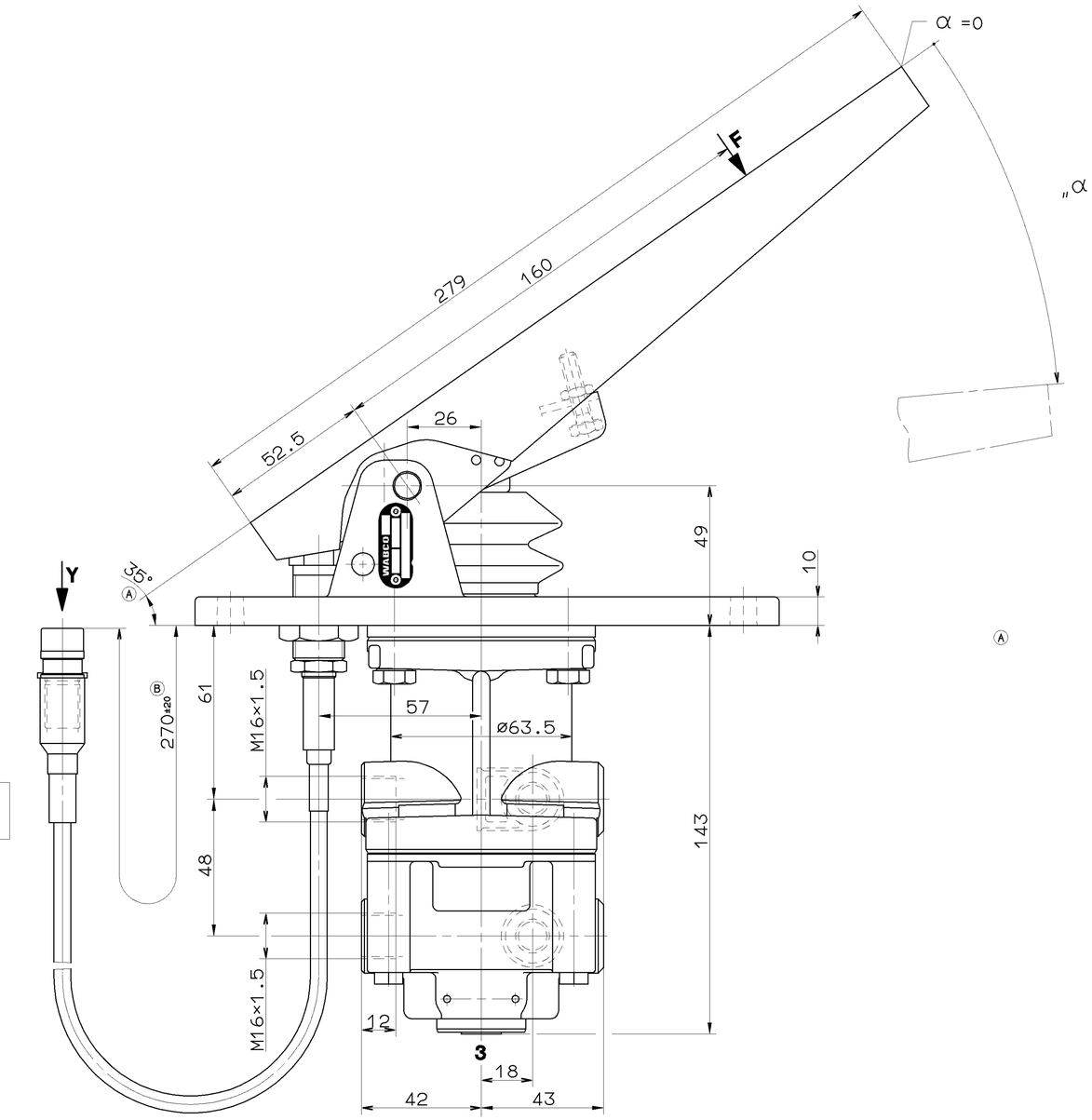

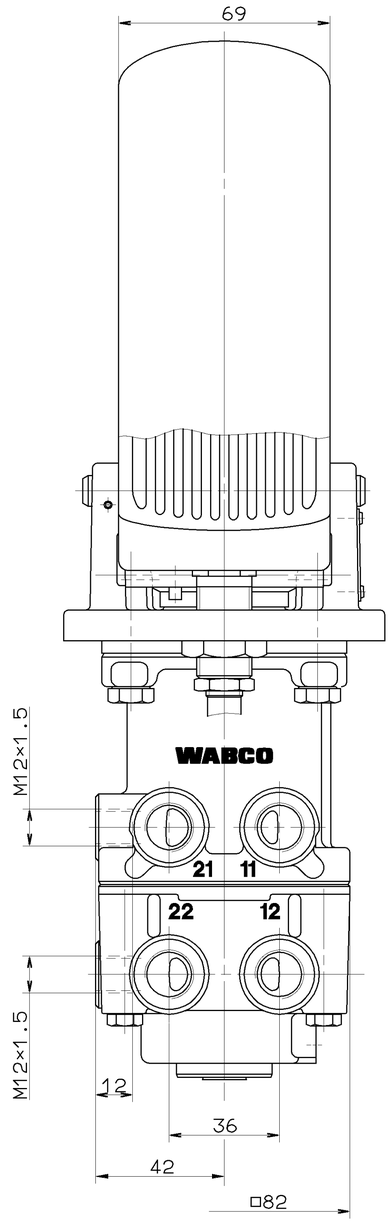

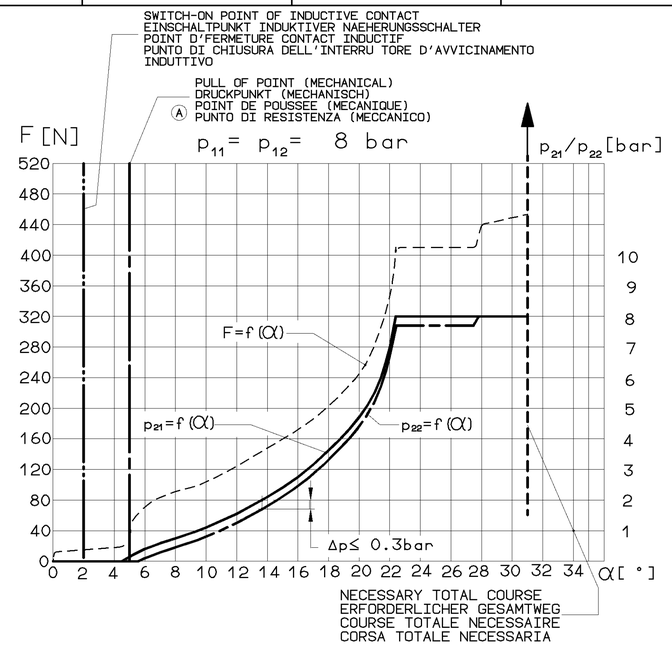

11 / 12 SUPPLY / VORRAT / ALIMENTATION / ALIMENTAZIONE

21 / 22 OUTLET / AUSGANG / SORTIE / USCITA

3 EXHAUST / ENTLUEFTUNG / ECHAPPEMENT / SCARICO

THERMAL RANGE OF APPLICATION:
THERMISCHER ANWENDUNGSBEREICH:
GAMME D' APPLICATION THERMIQUE:
CAMPO DI APPLICAZIONE: -40°C...+80°C

MEDIUM: AIR
MEDIUM: LUFT
FLUIDE: AIR
FLUIDO: ARIA

WORKING PRESSURE:
BETRIEBSDRUCK:
PRESSION D UTILISATION:
PRESSIONE DI ESERCIZIO: p_e=MAX. 8.5 bar

(TEMPORARILY:
(KURZZEITIG:
(DE COURTE DUREE:
(BREVE TEMPO SOLO: p_e=MAX. 10 bar)

TORQUE FOR CONNECTIONS:
ANZUGSMOMENT FUER EINSCHRAUBSTUTZEN:
COUPLE DE SERRAGE DES RACCORDS:
COPPIA DI SERRAGGIO DEI RACCORDI:

M12×1.5: M=MAX. 21Nm
M16×1.5: M=MAX. 34Nm

INSTALLATION POSITION: EXHAUST SHOWN AT BASE (AXIS CENTRE OF THE DEVICE DEVIATES MAX. 45° FROM VERTICAL)
EINBAULAGE: ENTLUEFTUNG NACH UNTEN (MITTELACHSE DES GERAETES MAX. 45° VON DER SENKRECHTEN ABWEICHEND)
POSITION D' INSTALLATION: ECHAPPEMENT VERS LE BAS (ECART DE L' AXE MEDIAN DE L' APPAREIL PAR RAPPORT A LA VERTICALE: 45° MAX.)
POSIZIONE DI MONTAGGIO: SCARICO VERSO IL BASSO (DEVIAZIONE ASSE APPARECCHIO RISPETTO ALLA VERTICALE: MAX. 45°)

MAX. LOAD OF INDUCTIVE PROXIMITY SWITCH:
AT 9.6V...30V-0.1A (INDUCTIVE LOAD)
MAX. BELASTUNG INDUKTIVER NAEHERUNGSSCHALTER:
BEI 9.6V...30V-0.1A (INDUKTIVE LAST)
CHARGE MAX. DU DETECTEUR INDUCTIF DE PROXIMITE:
A 9.6V...30V-0.1A (CHARGE INDUCTIVE)
CARICO MAX. DELL' INTERRUTTORE INDUTTIVO D' AVVICINAMENTO:
A 9.6V...30V-0.1A (CARICO INDUTTIVE)

NOMINAL DIAMETER:
NENNWEITE:
DIAMETRE NOMINAL:
DIAMETRO NOMINALE: 78.5 mm² ≙ ø10mm

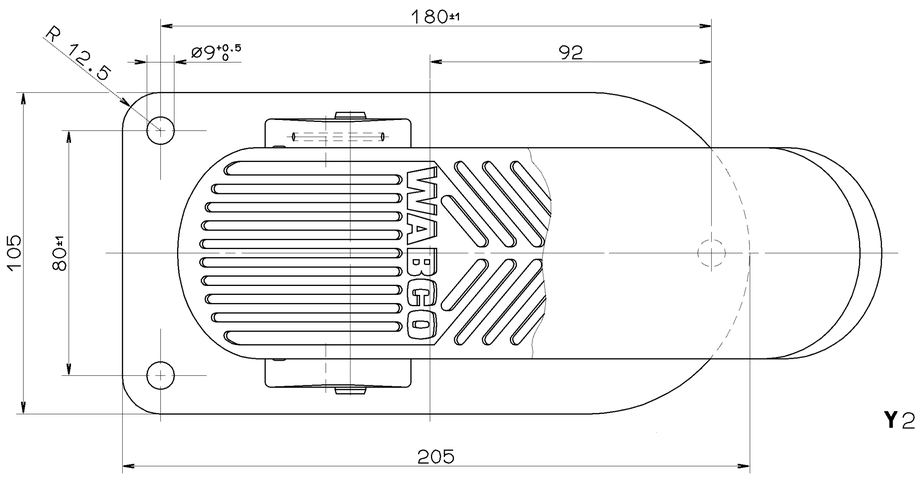

TYPE OF PROTECTION: PROTECTION AGAINST SHORT CIRCUIT AND REVERSE POLARITY
SCHUTZSCHALTUNG: KURZSCHLUSS- UND VERPOLUNGSFEST
TYPE DE PROTECTION: PROT. CONTRE COURT-CIRCUIT ET INVERSION DE POLARITY
TYPO DI PROTEZIONE: PROT. CONTRO CORTO CIRCUITO E INVERSIONE DELLA TENSIONE

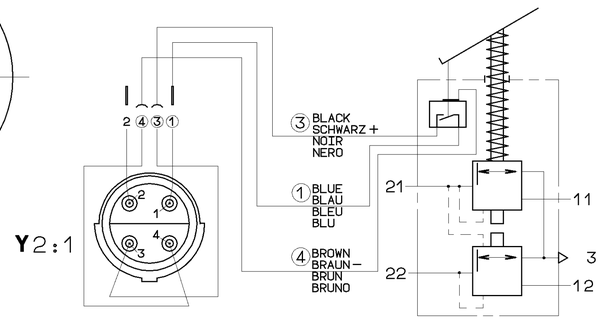

GENERAL SPECIFICATION: JED-334			
FURTHER TECHNICAL DATA: 894 041 112 2			
DOC. CODE: 605 SHEET: 1 TO 1			
GENERAL TOLERANCES			
CLASS 1)	RANGE OF NOMINAL DIMENSIONS [± mm] ≤50 / > 50 ≤180 / >180 ≤400 / >400		
FINE	0,5 / 1,0 / 1,5 / 2,0		
MEDIUM X	1,0 / 2,0 / 3,0 / 4,0	± 3°	
COARSE	2,0 / 3,5 / 5,0 / 6,5		
TAPPED HOLES ACC. ISO 4039 / JED-152			
1) TOLERANCE CLASS APPLIED CROSSMARKED			

DCN-NO.	REV.	DATE
062425	1×B	97-08-26
062414	3×A	97-03-25

100mm

CADAM-DRAWING COPYRIGHT

DATE	SIGNATURE
DRAWN: 97-03-14	KULERSKY
CHECKED: 97-03-14	MARTINI
STANDARDIZATION:	

WABCO

BRAKE VALVE
MOTORWAGEN-BREMSVENTIL
ROBINET DE FREINAGE
DISTRIBUTORE DI COMANDO

MASS	SCALE	PRODUCT IDENTIFICATION NO.	DOC. CODE	SHEET
≈2,9 KG	1:1 2:1	461 318 485 0	605	1/1
SIZE A 1	T.R.I. 140	SHAPE CODE	REPLACEMENT FOR	

EXPERT CODE 7 3 6

PRODUCT TYPE 0 0 X

TOUTE COMMUNICATION OU REPRODUCTION DE CE DOCUMENT, TOUTE EXPLOITATION OU COMMUNICATION DE SON CONTENU N'EST PAS AUTORISEE SAUF AUTORISATION ECRITE. TOUS DROITS SONT RESERVES EN CAS DE DELIVRANCE DE BREVET, DE MODELE D'UTILITE OU DE MARQUE DE SERVICE.
NON E' PERMESSO CONSEGNARE A TERZI O RIPRODURRE QUESTO DOCUMENTO, NE UTILIZZARE IL CONTENUTO O RIVELARE IL CONTENUTO A TERZI SENZA ESPRESSA AUTORIZZAZIONE SCRITTA. TUTTI I DIRITTI SONO RISERVATI IN CASO DI CONCESSIONE DI BREVETTO, DI MODELLO DI UTILITÀ O DI MARCHIO DI FABBRICA.
NI EST PAS AUTORISE LA REMISE A DES TIERS OU LA REPRODUCTION DE CE DOCUMENT, LA MISE EN VIGUEUR OU LA COMMUNICATION DE SON CONTENU SANS AUTORISATION ECRITE. TOUS DROITS RESERVES EN CAS DE DELIVRANCE DE BREVET, DE MODELE D'UTILITE OU DE MARQUE DE FABRIQUE.
THIS DOCUMENT, AND GIVING IT TO OTHERS AND THE USE OF COMMUNICATION OF THE CONTENTS THEREOF, ARE NOT PERMITTED WITHOUT AUTHORIZATION. ALL RIGHTS RESERVED IN THE EVENT OF THE GRANTING OF A PATENT, UTILITY MODEL OR REGISTRATION OF A TRADE MARK.
THIS DOCUMENT IS THE SUBJECT OF COPYRIGHT.

1009/016/0/04.93
605/0/003