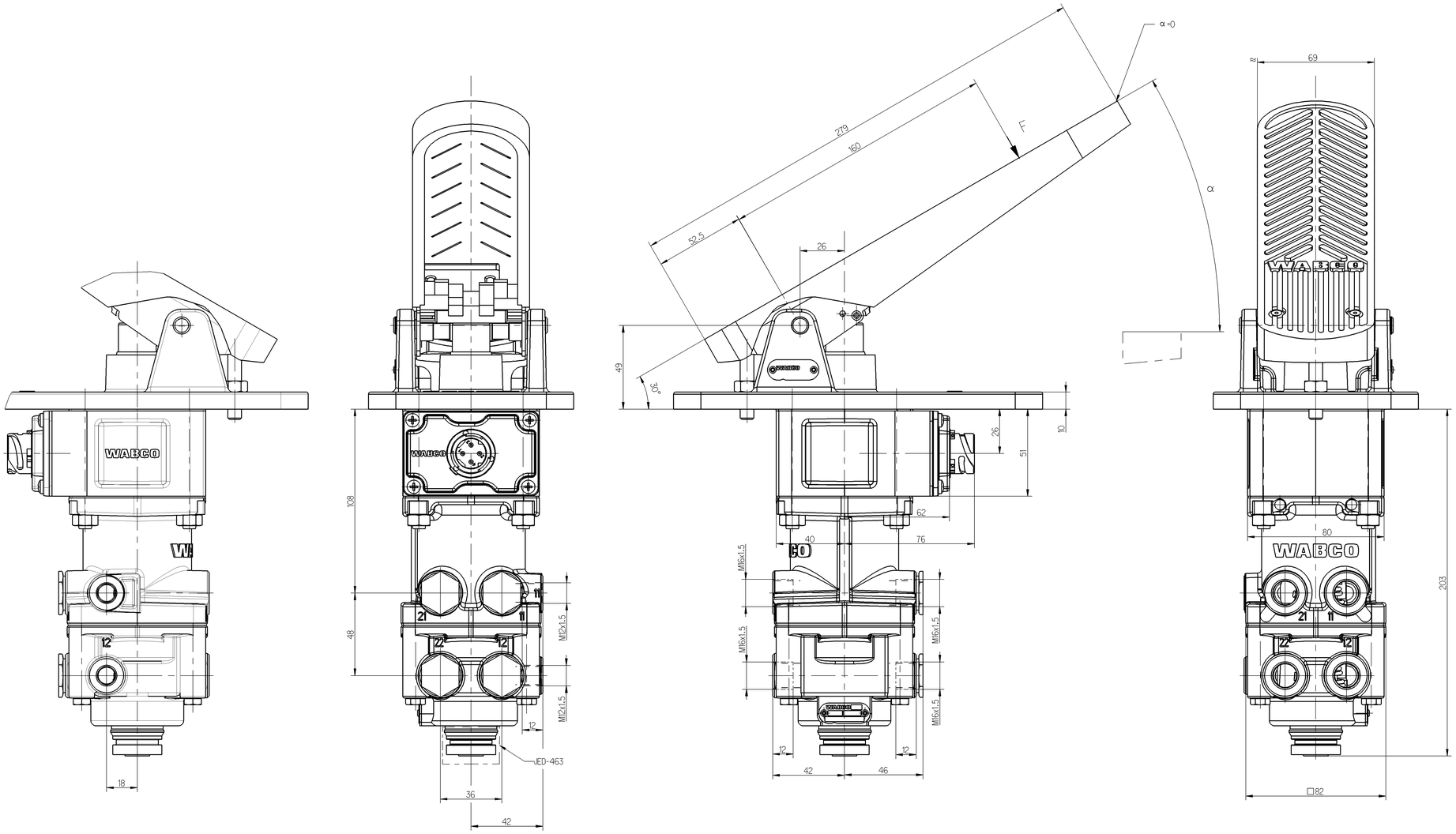

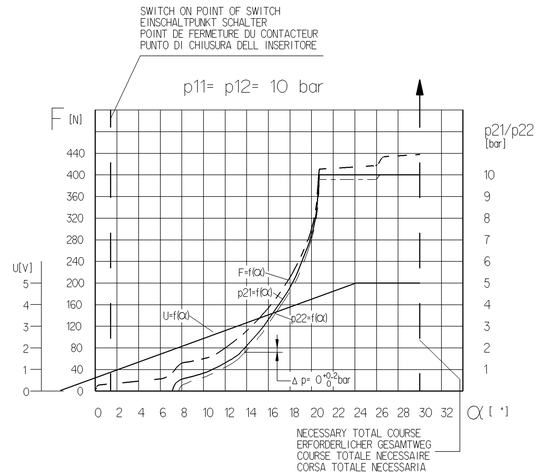

SUPPLY
11/12 VORRAT
ALIMENTATION
ALIMENTAZIONE

OUTLET
21/22 AUSGANG
SORTIE
USCITA

EXHAUST
3 ENTLUEFTUNG
ECHAPPEMENT
SCARICO

MEDIUM: AIR
MEDIUM: LUFT
FLUIDE: AIR
FLUIDO: ARIA

NOMINAL DIAMETER :
NENNWEITE : 78.5 mm² ≙ Ø10
DIAMETRE NOMINAL :
DIAMETRO NOMINALE:

WORKING PRESSURE :
BETRIEBSDRUCK : p_e=MAX.10 bar
PRESSION D'UTILISATION:
PRESSIONE DI ESERCIZIO:

(TEMPORARILY:
(KURZZEITIG: p_e=MAX.12.5)
(DE COURTE DUREE:
(BREVE TEMPO SOLO:

THERMAL RANGE OF APPLICATION :
THERMISCHER ANWENDUNGSBEREICH: -40°C . . . +80°C
GAMME D'APPLICATION THERMIQUE:
CAMPO TERMICO D'APPLICAZIONE :

TORQUE FOR CONNECTIONS:
ANZUGSMOMENT FUER EINSCHRAUBSTUTZEN: M16x1.5: M=MAX. 34 Nm
COUPLE DE SERRAGE DES RACCORDS: M12x1.5: M=MAX. 21 Nm
COPPIA DI SERRAGGIO DEI RACCORDI:

OPERATING VOLTAGE :
BETRIEBSSPANNUNG : 8 . . . 32 V DC
TENSION DE SERVICE :
TENSIONE DI SERVIZIO:

ANALOG OUTLET:
AUSGANG ANALOG: 0.5 . . . 5 V
SORTIE ANALOGIQUE:
USCITA ANALOGIA:

CURRENT CONSUMPTION :
STROMAUFNAHME : ≤ 20mA
CONSOMMATION DE COURANT :
ASSORBIMENTO DI CORRENTE:

SWITCH LOAD: I ≤ 400 mA
SCHALTERBELASTUNG: U ≤ 30 V DC
CHARGE D'INTERRUPTEUR: Uxi ≤ 0.12 VA
CARICO DEL INTERRUTTORE:

LOAD RESISTANCE:
LAST WIDERSTAND: ≤ 5.1kΩ
RESISTANCE DE CHARGE:
RESISTENZA DI CARICO:

INSTALLATION POSITION:EXHAUST SHOWN AT BASE(AXIS CENTRE OF THE DEVICE DEVIATES MAX. 45° FROM VERTICAL)
EINBAULAGE:ENTLUEFTUNG NACH UNTEN(MITTELACHSE DES GERAETES MAX. 45° VON DER SENKRECHTEN ABWEICHEND)
POSITION D'INSTALLATION:ECHAPPEMENT VERS LA BAS(ECART DE L'AXE MEDIAN DE L'APPAREIL PAR RAPPORT A LA VERTICALE: 45° MAX.)
POSIZIONE DI MONTAGGIO:SCARICO VERSO IL BASSO(DEVIAZIONE ASSE APPARECCHIO RISPETTO ALLA VERTICALE: MAX. 45°)

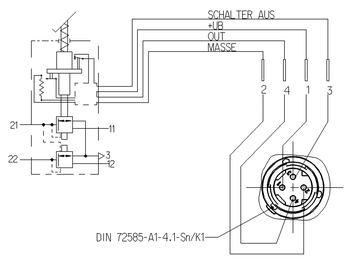

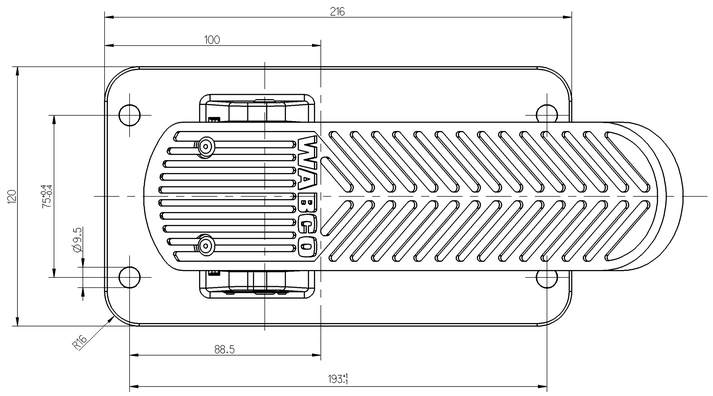

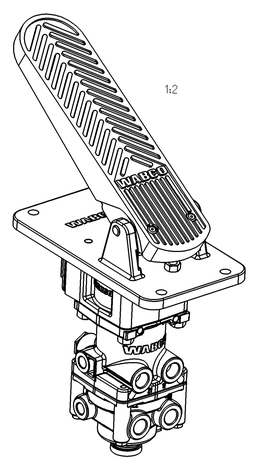

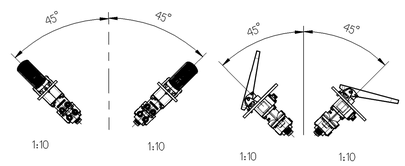

General Specification: JED-334-O						
Further Technical Data:						
Doc. Code:			Sheet-	To		
General Tolerances JED-261						
		Range of Nominal Dimensions (in mm)				
Class 1)		≤ 50	> 50 ≤ 180	> 180 ≤ 400	> 400	∢
Fine		0.5	1.0	1.5	2.0	
Medium	X	1.0	2.0	3.0	4.0	±3°
Coarse		2.0	3.5	5.0	6.5	
Tapped Holes acc.: ISO 4029 / JED-152						
1) Tolerance Class Applied Crossmarked						

Copyright WABCO®

Date	Signature		
Drawn 2011-03-25	Elze		
Checked 2011-03-25	Martini		
Agent Martini			
Mass 3.7 kg	Scale 1:1 (1:2)		
Size A 0	CAD System Pro/E		

WABCO

BRAKE VALVE
MOTORWAGEN-BREMSVENTIL
ROBINET DE FREINAGE
DISTRIBUTORE DI COMANDO

Material No.: 461 318 611 0

Date of first issue: 2011-03-25
Doc.-Code: 005 | Language: ML | Sheet: 1/1

ECN No. - | Revision - | Techn. Resp.: 5182 | Replacement for

TOLERANCE