TIRAGE du :

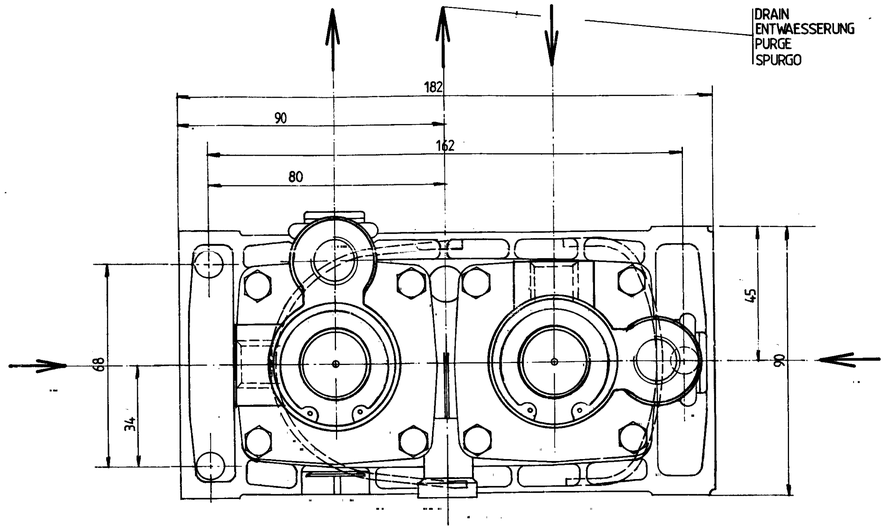

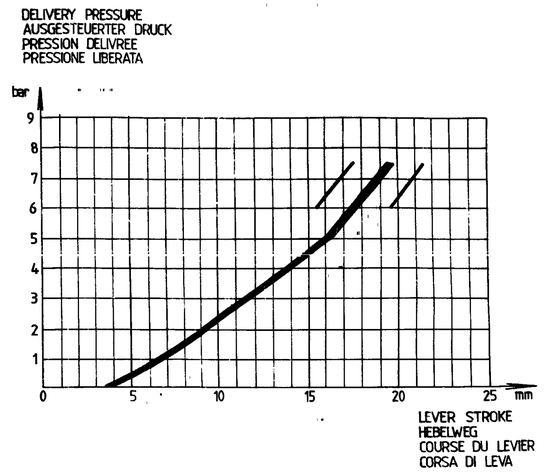

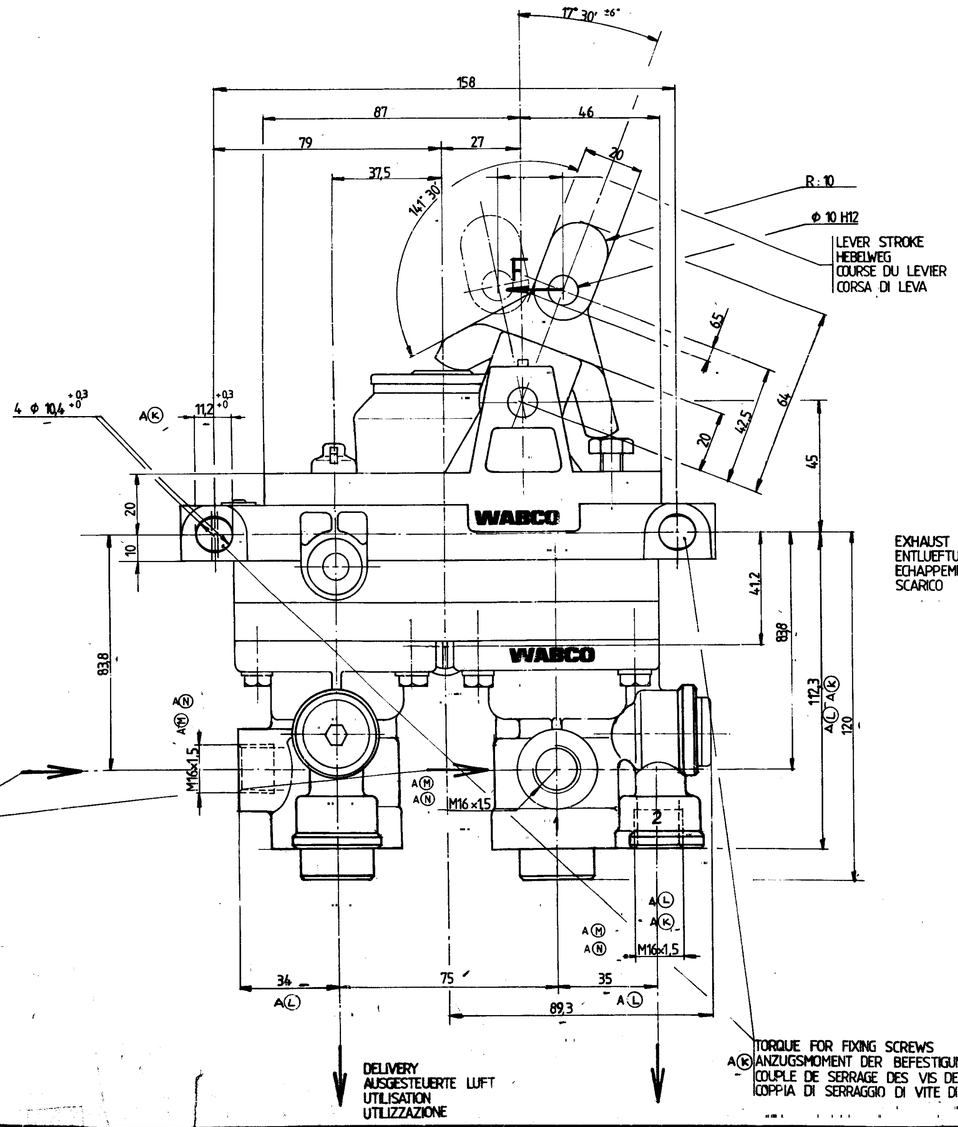

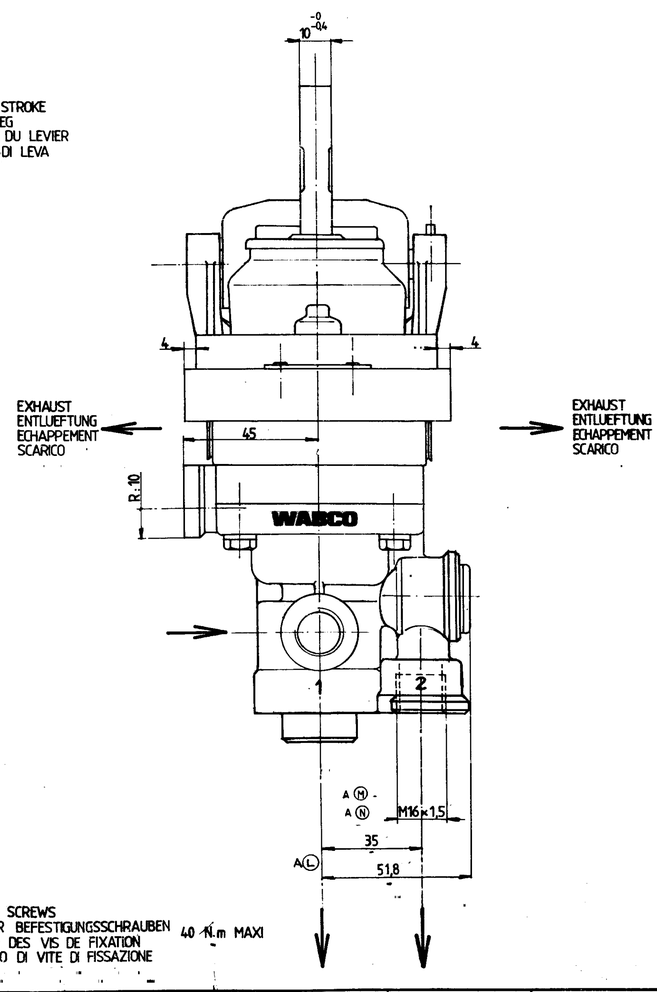

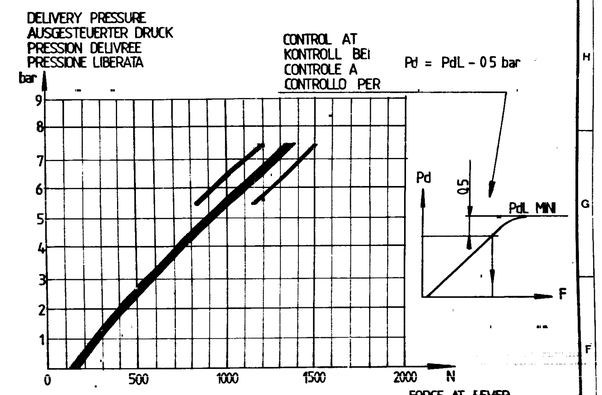

INSTALLATION POSITION AS DRAWN (FRONT VIEW)
EINBAULAGE WIE GEZEICHNET (FRONTALANSICHT)
POSITION D'INSTALLATION SUIVANT DESSIN (VUE DE FACE)
POSIZIONE DI MONTAGGIO COME DESIGNATO (VISTA DI FRONTE)

MEDIUM MEDIUM FLUIDE FLUIDE	COMPRESSED AIR DRUCKLUFT AIR COMPRIME ARIA COMPRESSA		
INLET PRESSURE BETRIEBSDRUCKE PRESSION D'ALIMENTATION PRESSIONE D'ALIMENTAZIONE	Pa	bar	15
ADJUSTING OF DELIVERY PRESSURE EINSTELLUNG DES AUSGESTEUERTEN DRUCKES REGLAGE DE LA PRESSION DELIVREE (SRA 6110) REGOLAZIONE DELLA PRESSIONE LIBERATA	PdL	bar	7,5 ±0,3
WORKING TEMPERATURE TERMISCHER ANWENDUNGSBEREICH TEMPERATURE D'UTILISATION TEMPERATURA DI UTILIZZAZIONE	T	°C	-30 +80

87006	5	A(N)	67.01.20	
86047	5	A(M)	86.05.28	
81025	A	(L)	81-03-20	
80092	A	(K)	80-08-12	
79 500	A	(J)	79-11.08	

GENERAL SPEC - ALLGEMEINE SPEZ - SPEC GENERALES - SPEC GENERALI
TREATMENT - BEHANDLUNG / TRAITEMENT - TRATTAMENTO
SURFACE PROTECTION - OBERFLACHENSCHUTZ / PROTECTION - PROTEZIONE
MATERIAL - WERKSTOFF / MATIETE - MATERIALE
BLANK NO - ROHTEILNUMMER / NO. PIECE BRUTE - NO. PEZZO GREZZO

DATE 79-11-08 DRAWN
CHECKED 81.03.25
STANDARDIZATION

WABCO WESTINGHOUSE

DMRL VALVE
DMRL VENTIL
VALVOLA FRENANTE DMRL
ROBINET DMRL

MASS ≃ 3 kg
SCALE 1:1
IDENTIFICATION CODE 461 494 100 0
F 722 780 00
SHEET 1

CHANGE NO LITT. DATE
REPLACEMENT FOR DRAWING OF 75-03-17 A(J)
SIZE A1
T.R.I. 210
CODE FOR FUNCTION
CODE FOR SHAPE
CODE FOR DOCUMENT 605

INSCRIT