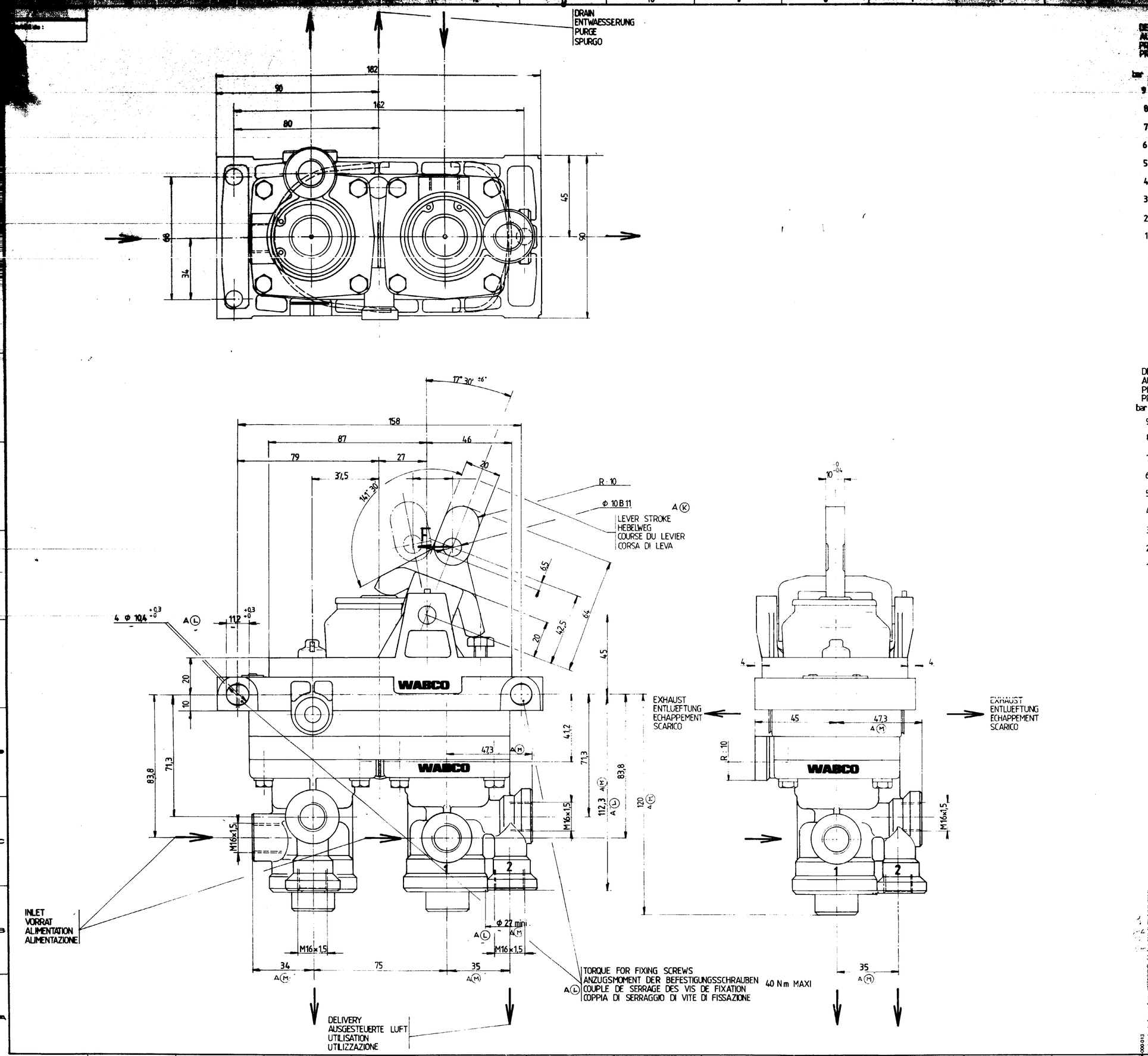

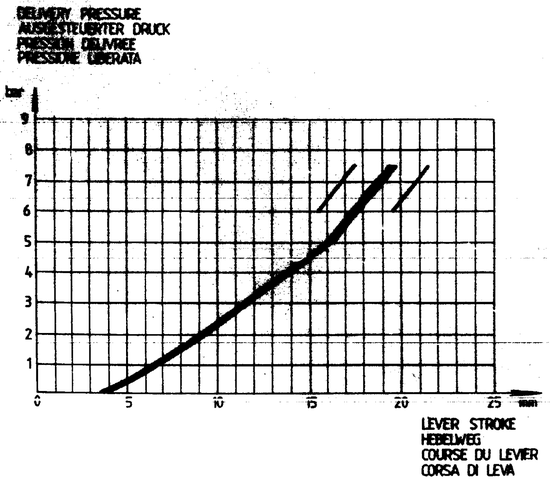

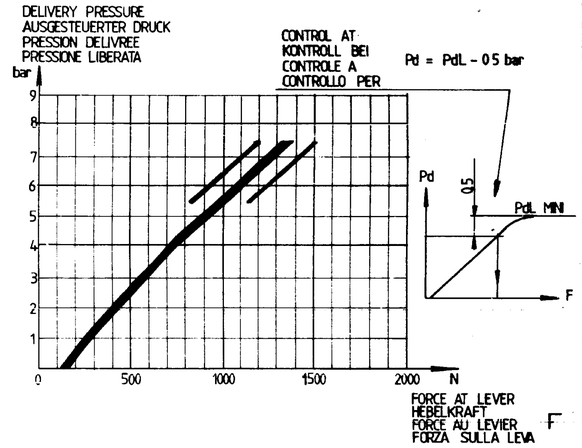

INSTALLATION POSITION AS DRAWN (FRONT VIEW) EINBAULAGE WIE GEZEICHNET (FRONTALANSICHT) POSITION D'INSTALLATION SUIVANT DESSIN (VUE DE FACE) POSIZIONE DI MONTAGGIO COME DESIGNATO (VISTA DI FRONTE)			
MEDIUM MEDIUM FLUIDE FLUIDE	COMPRESSED AIR DRUCKLUFT AIR COMPRIME ARIA COMPRESSA		
INLET PRESSURE BETRIEBSDRUCKE PRESSION D'ALIMENTATION PRESSIONE D'ALIMENTAZIONE	Pa	bar	15
ADJUSTING OF DELIVERY PRESSURE EINSTELLUNG DES AUSGESTEUERTEN DRUCKES REGLAGE DE LA PRESSION DELIVREE (SRA 6110) REGOLAZIONE DELLA PRESSIONE LIBERATA	PdL	bar	7,5 ±0,3
WORKING TEMPERATURE TERMISCHER ANWENDUNGSBEREICH TEMPERATURE D'UTILISATION TEMPERATURA DI UTILIZZAZIONE	T	°C	-30 +80

81059	A (M)	81.06.05	
80092	A (L)	80.09.11	
80 008	A (K)	80.02.14	
79 500	A (J)	79.11.08	

GENERAL SPEC ALLGEMEINE SPEZ SPEC GENERALES SPEC GENERALI

BLANK NO - ROHTEILNUMMER NO PIECE BRUTE - NO PEZZO GREZZO

TREATMENT BEHANDLUNG TRAITEMENT TRATTAMENTO

SURFACE PROTECTION - OBERFLACHENSCHUTZ PROTECTION - PROTEZIONE

MATERIAL WERKSTOFF MATERIE - MATERIALE

DATE | SIGNATURE

DRAWN: 79-11-08 FOURGEAUD

CHECKED: PICHON

STANDARDIZATION: TRAN

WABCO WESTINGHOUSE

DMRL VALVE
DMRL VENTIL
VALVOLA FRENANTE DMRL
ROBINET DMRL

MASS	SCALE	IDENTIFICATION CODE	SHEET
≃ 3 kg	1:1	461 494 103 0	F 722 780 93 /

REPLACEMENT FOR	SIZE	T.R.I.	CODE FOR FUNCTION	CODE FOR SHAPE	CODE FOR DOCUMENT
DRAWING OF 75-03-17 A (J)	A 1	210	519		605

834 000 013

INSCRIT