MAXIMUM WORKING PRESSURE MAXIMALER BETRIEBSDRUECK PRESSION D'UTILISATION MAXIMALE PRESSIONE DI ESERCIZIO MASSIMO	9,5 bar
THERMAL RANGE OF APPLICATION THERMISCHER ANWENDUNGSBEREICH GAMME D'APPLICATION THERMIQUE CAMPO THERMICO D'APPLICAZIONE	-40°...+65°C
WORKING MEDIUM ARBEITSMEDIUM FLUIDE D'UTILISATION FLUIDO DI ESERCIZIO	SEE PRODUCT SPECIFICATION SIEHE PRODUKTSPEZIFIKATION VOIR SPECIFICATION DU PRODUIT VEDERE SPECIFICA DI PRODOTTO
CHARGING PRESSURE UEBERSTROEMDRUCK PRESSION DE BARRAGE PRESSIONE DI PRESA	$6.2^{+0.1}_{-0.2}$ bar
FURTHER TECHNICAL DATA SEE PRODUCT SPECIFICATION: WEITERE TECHNISCHE DATEN SIEHE PRODUKT-SPEZIFIKATION: POUR AUTRES DONNEES TECHNIQUES VOIR PRODUCT: PER ULTERIORI DATI TECNICI VEDERE SPECIFICA DI PRODOTTO:	461 513 010 0 Doc. Code: 035
TORQUE FOR CONNECTIONS: ANZUGSMOMENT FUER EINSCHRAUBSTUTZEN: COUPLE DE SERRAGE DES RACCORDS: COPPIA DI SERRAGGIO DEI RACCORDI:	M16x1,5: $M_{max.}$ = 34 Nm M22x1,5: $M_{max.}$ = 53 Nm

<1> SAFETY CHARACTERISTICS	0
<2> SIGNIFICANT CHARACTERISTICS	0
<CI> CUSTOMER INTERFACE	0

Ⓐ

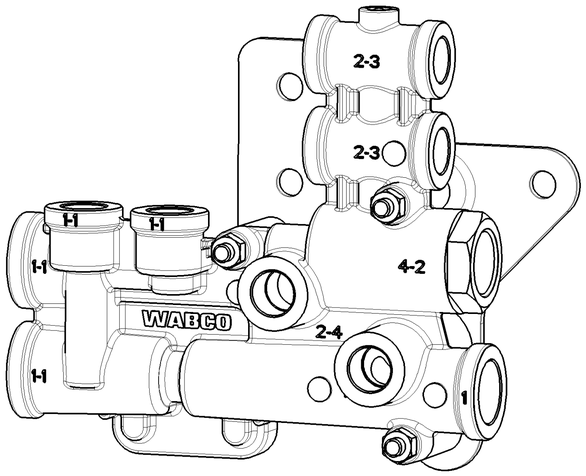

PORT ANSCHLUSS ORIFICE ORIFIZIO	FUNCTION FUNKTION FUNCTION FUNZIONE	THREAD GEWINDE FILETAGE FILETTATURA
1-1	AIR SUSPENSION DEVICES LUFTFEDERUNGSGERAETE APPAREILS DE SUSPENSION PNEUMATIQUE APPARECCHI SOSPENSIONE PNEUMATICA	M16X1,5
1-1*	AIR SUSPENSION DEVICES LUFTFEDERUNGSGERAETE APPAREILS DE SUSPENSION PNEUMATIQUE APPARECCHI SOSPENSIONE PNEUMATICA	M22X1,5
1	AIR RESERVOIR LUFTBEHAELTER RESERVOIR D'AIR SERBATOIO D'ARIA	M22X1,5
2-4	BRAKE PRESSURE BREMSDRUECK PRESSION DE FREINAGE PRESSIONE DI FRENATURA	M16X1,5
2-3	SPRING BRAKE CYLINDER FEDERSPEICHERZYLINDER CYLINDRE A RESSORT CILINDRO A MOLLA	M16X1,5
1	PARK RELEASE EMERGENCY VALVE PARK LOESE SICHERHEITSVENTIL VALVE D'URGENCE ET DESSERAGE REMORQUE SERVADISTRIBUTORE PREV	M16X1,5
4-2	PARK RELEASE EMERGENCY VALVE PARK LOESE SICHERHEITSVENTIL VALVE D'URGENCE ET DESSERAGE REMORQUE SERVADISTRIBUTORE PREV	M22X1,5

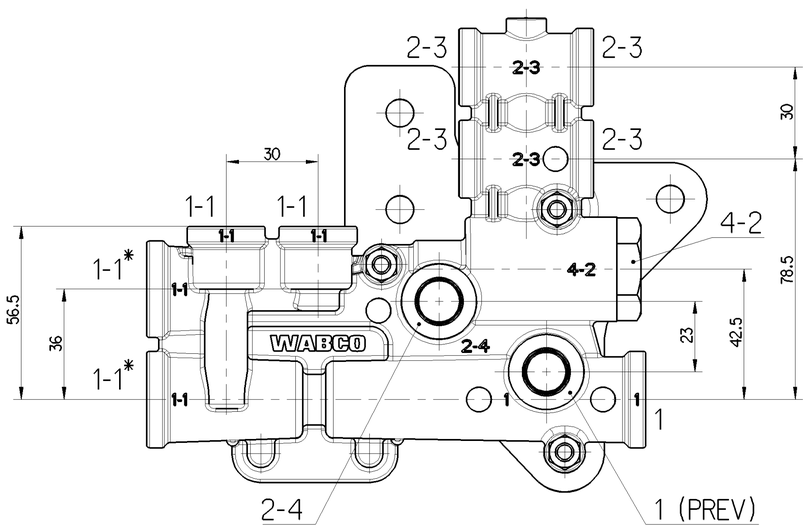

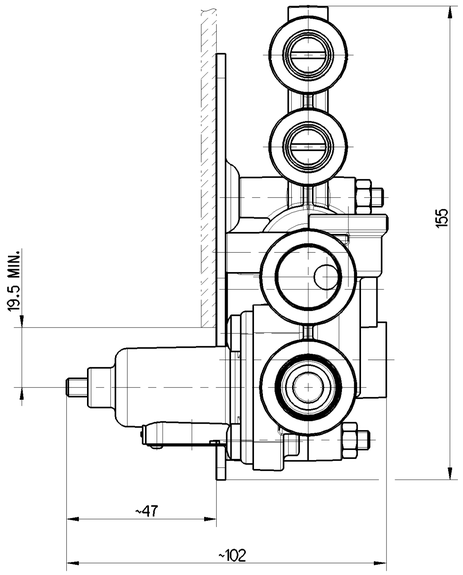

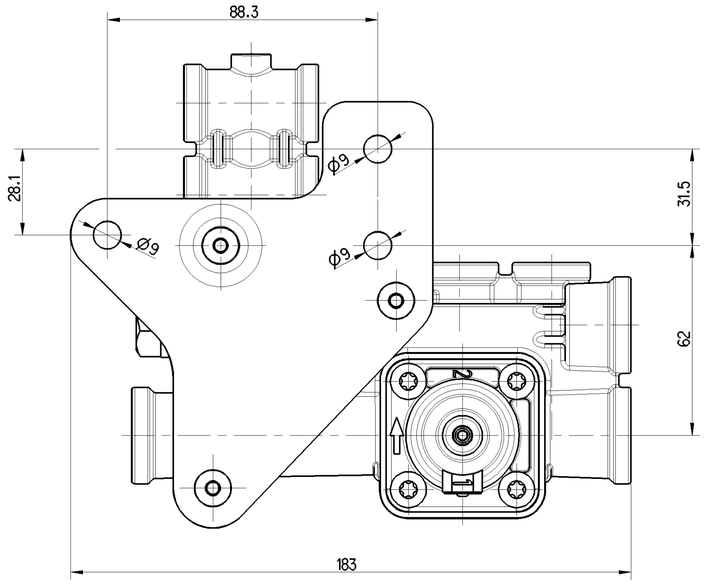

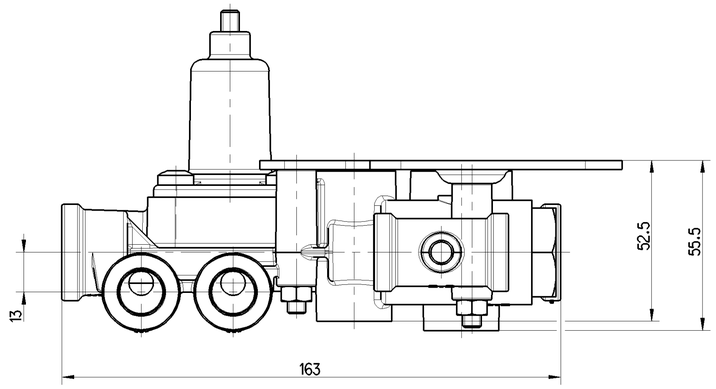

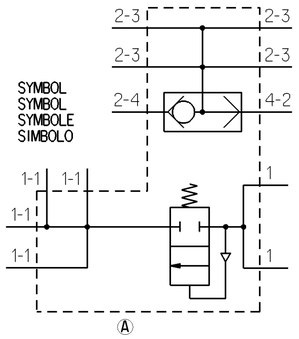

Ⓐ

General Specification: JED-334-1 , Size ISO 14405 LP						
Further Technical Data: 461 513 010 0						
Doc. Code: 035			Sheet: 1 To 13			
General Tolerances JED-261						
	Range of Nominal Dimensions (± mm)					
Class 1)	≤ 50	> 50 ≤ 180	> 180 ≤ 400	> 400		
Fine		0.5	1.0	1.5	2.0	±3°
Medium	X	1.0	2.0	3.0	4.0	
Coarse		2.0	3.5	5.0	6.5	
Tapped Holes acc. JED-152						
1) Tolerance Class Applied Crossmarked						

Copyright WABCO®

Date	Signature
Drawn 2021-10-19	Bologa
Checked 2021-10-20	Szyszka
Expert Szyszka	

WABCO

PNEUMATIC EXTENSION MODULE
PNEUMATISCHES ERWEITERUNGSMODUL
MODULE D'EXTENSION PNEUMATIQUE
MODULO DI ESTENSIONE PNEUMATICO

Mass	Scale	Material No.	Date of first issue: 2008-11-25		
0.985 kg	1:1	461 513 010 0	Doc.Code 005	Language ML	Sheet 1/1
Size A 1	CAD System CREO	ECN-No. 507663	Revision 3 x A	Techn. Resp. 6885	Replacement for -

100mm

Toute Communication ou reproduction de ce document, toute exploitation ou communication de son contenu sont interdites, sauf autorisation écrite. Tous droits de propriété industrielle réservés, notamment en matière de brevets et de modèles.

Weitergabe sowie Vervielfältigung dieser Unterlage, Verwertung und Mitteilung ihres Inhalts nicht gestattet, soweit nicht ausdrücklich zugesichert. Gewerbliche Schutzrechte vorbehalten, insbesondere Patent- und Gebrauchsmustereintragung vorbehalten.

Vietato il permesso consegnare a terzi o riprodurre questo documento, re utilizzare il contenuto o renderlo comunque noto o farne ricorso per qualsiasi scopo. Ogni violazione costituisce un illecito e comporta il risarcimento dei danni. Tutti i diritti riservati di tutti i diritti derivanti da brevetti o modelli.

Copying of this document and giving it to others and the use or communication of the contents thereof, are forbidden without express authority. Offenders are liable to the payment of damages. All rights are reserved in the event of the grant of patent or registration of a utility model or design. This document is the subject of copyright.