Non è permesso consegnare a terzi o riprodurre questo documento, nè utilizzarne il contenuto o renderlo comunque noto a terzi senza autorizzazione esplicita. Ogni infrazione costituirà un evidente abuso e comporterà il risarcimento dei danni subiti. E'fatta riserva di tutti i diritti derivanti da brevetti o modelli.

Copying of this document and giving it to others and the use or communication of the contents thereof, are forbidden without express authority. Contravention of this restriction will constitute an evident abuse and result in a liability to the payment of damages. All rights are reserved in the event of the grant of patent or registration of a utility model or design. This document is the subject of copyright.

Toute Communication ou reproduction de ce document, toute exploitation ou communication de son contenu sont interdites, sauf autorisation expresse. Tout manquement à cette règle constitue un abus évident et expose son auteur au versement de dommages et interêts. Tous droits de propriété industrielle réservés, notamment en matière de brevets et de modèles.

Weitergabe sowie Vervielfältigung dieser Unterlage, Verwertung und Mitteilung ihres Inhalts nicht gestattet, soweit nicht ausdrücklich zugestanden. Zuwiderhandlungen stellen einen offensichtlichen Missbrauch dar und verpflichten zu Schadenersatz. Alle Rechte fuer den Fall der Patenterteilung oder Gebrauchsmuster-Eintragung vorbehalten.

A	B	C	D	E	F	G	H	I	J	K	L	M	N	O
M16x1,5	M16x1,5	24	13	105	30-35Nm	acc. ISO3583	spanner 19	Hex. 22	M16x1,5 Hex. 22	Hex. 22	~47,5	40	ø12 for hose	with oring

F: recommended torque without lubrication (max. torque) respect max. torque of counter part

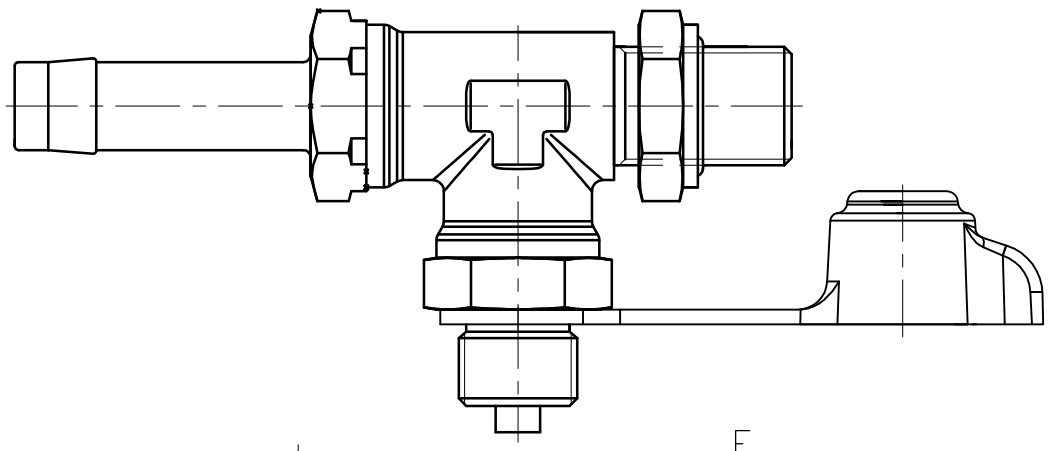

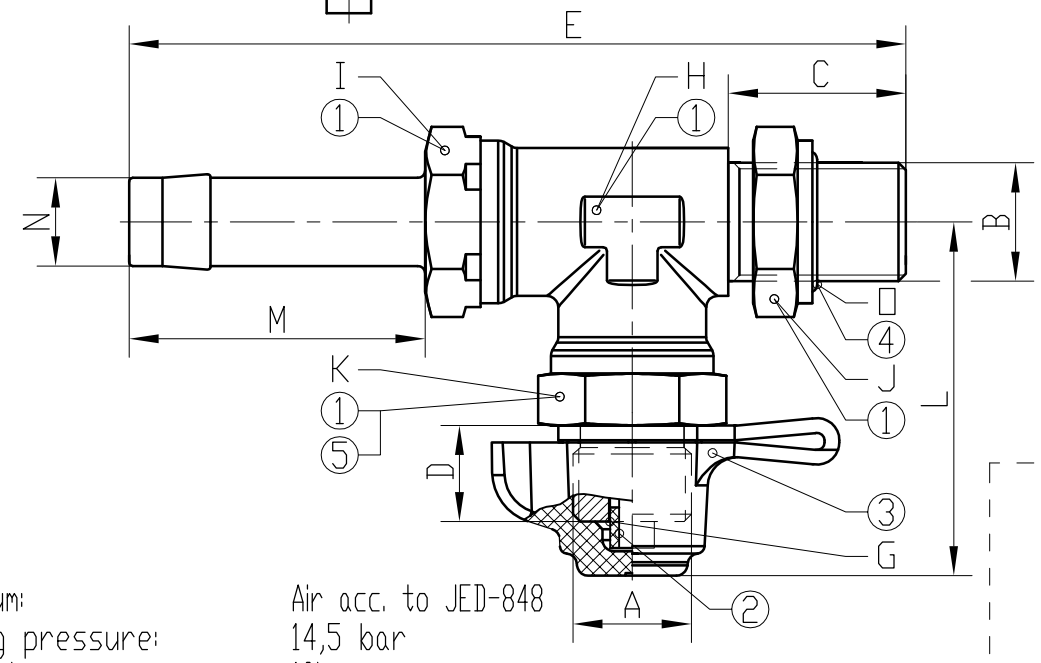

Cleanliness requirement:
No particles >1mm allowed according mandatory standard: JED-334 and JED-593

Material :
1. CuZn
2. PA6
3. TPE
4. EPDM
5. inner components: POM, EPDM, stainless steel, CuZn

General Specification: JED-762 ; JED-271 ; JED-622 ; JED-220 ; JED-367
Engineering related agreements with Supplier have to be mentioned in the "Release of Supplier"

Working medium:	Air acc. to JED-848
Max. working pressure:	14,5 bar
Nominal working pressure:	10bar
Nominal diameter:	4mm
Thermal range of application:	-40°C ... 93°C 1h 120°C without function
Product specification:	463 703 116 0 doc code 035
Part specification:	463 703 116 0 doc code 014

Suitable for use in air brake systems for commercial vehicles

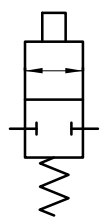

General Specification: JED-334-1 , Size ISO 14405 LP
Further Technical Data:
Doc. Code: Sheet: To

General Tolerances JED-261

Class 1)		Range of Nominal Dimensions (± mm) ≤50	> 50 ≤ 180	> 180 ≤ 400	> 400	∡
Fine	X	0.5	1.0	1.5	2.0	±3°
Medium		1.0	2.0	3.0	4.0	
Coarse		2.0	3.5	5.0	6.5	

Tapped Holes acc.
1) Tolerance Class Applied Crossmarked

Copyright WABCO®

Date	Signature
Drawn 2015-03-04	Gdula
Checked 2015-03-12	Kaufmann
Expert Kaufmann	

WABCO

Test connection

Mass	Scale	Material No.	Date of first issue:		
0.182 KG	1:1	463 703 032 0	Doc.Code 005	Language EN	Sheet 1/1
Size A 3	CAD System Inventor	ECN-No.	Revision –	Techn. Resp. 5791	Replacement for

100mm

drw: 463703032____005 / Version: A.00 / state: Approved / mdl: 463703032____A00