Non e permesso consegnare a terzi o riprodurre questo documento, ne utilizzarne il contenuto o renderlo comunque noto a terzi senza autorizzazione esplicita. Ogni infrazione costituira un evidente abuso e comportera il risar cimento dei danni subiti. E'fatta riserva di tutti i diritti derivanti da brevetti o modelli.

Copying of this document and giving it to others and the use or communication of the contents thereof, are forbidden without express authority. Contravention of this restriction will constitute an evident abuse and result in a liability to the payment of damages. All rights are reserved in the event of the grant of patent or registration of a utility model or design. This document is the subject of copyright.

Toute Communication ou reproduction de ce document, toute exploitation ou communication de son contenu sont interdites, sauf autorisation expresse. Tout manquement a cette regle constitue un abus evident et expose son auteur au versement de dommages et interets. Tous droits de propriete industrielle reserves, notamment en matiere de brevets et de modeles.

Weitergabe sowie Vervielfaeltigung dieser Unterlage, Verwertung und Mitteilung ihres Inhalts nicht gestattet, soweit nicht ausdruecklich zugestanden. Zuwiderhandlungen stellen einen offensichtlichen Missbrauch dar und verpflichten zu Schadenersatz. Alle Rechte fuer den Fall der Patenterteilung oder Gebrauchsmuster-Eintragung vorbehalten.

| A | B | C | D | E | F | G | H |
|---|---|---|---|---|---|---|---|
| M16x1,5 | 1/4-18 NPTF | 11 | Hex.17 | 11 | ~36 | 24-28 Nm | acc. ISO 3583 |

G: recommended torque without lubrication (max. torque) respect max. torque of counter part

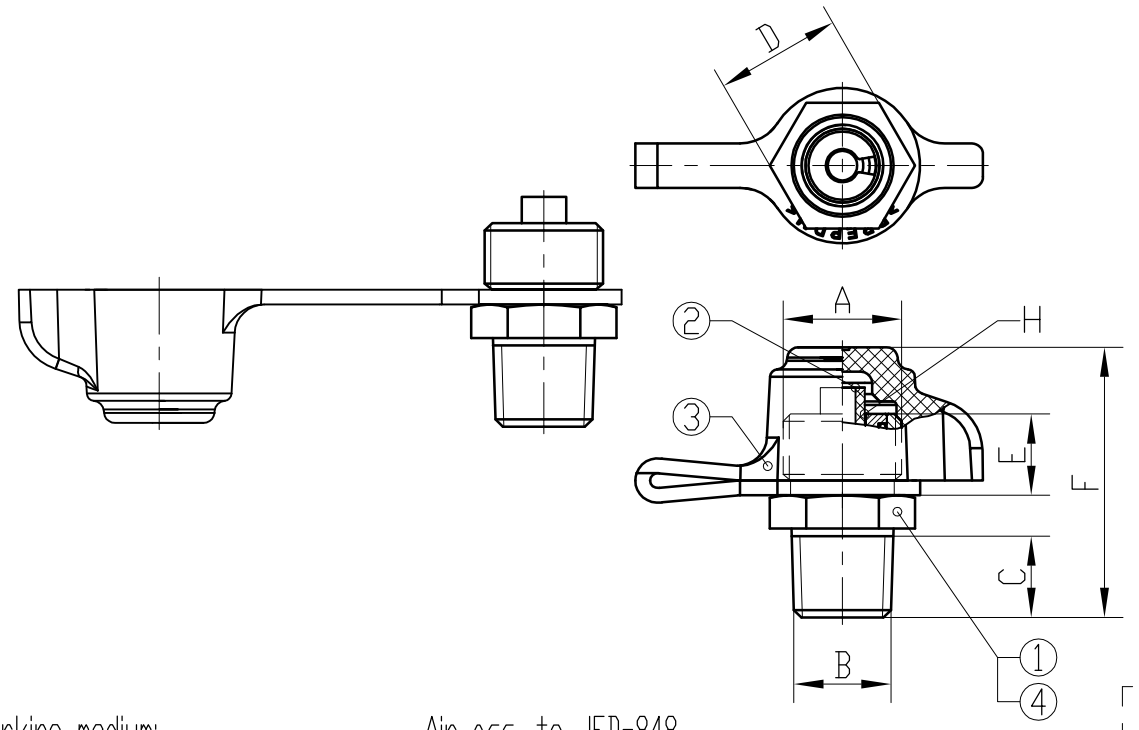


Cleanliness requirement:
No particles >1mm allowed according mandatory standard: JED-334 and JED-593

Material :
1. CuZn
2. PA6
3. TPE
4. inner components: EPDM, stainless steel

General Specification: JED-762 ; JED-271 ; JED-622 ; JED-220 ; JED-367

Engineering related agreements with Supplier have to be mentioned in the "Release of Supplier"

| | |
|---|---|
| Working medium: | Air acc. to JED-848 |
| Max. working pressure: | 14,5 bar |
| Nominal working pressure: | 10bar |
| Nominal diameter: | 4mm |
| Thermal range of application: | -40°C ... 93°C<br>1h 120°C without function |
| Product specification: | 463 703 116 0 doc code 035 |
| Part specification: | 463 703 116 0 doc code 014 |

Suitable for use in air brake systems for commercial vehicles

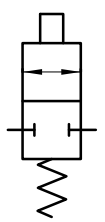

General Specification: JED-334-1 , Size ISO 14405 LP

Further Technical Data:

Doc. Code: | Sheet: To

General Tolerances JED-261

| Class 1) | | Range of Nominal Dimensions (± mm) ≤50 | > 50 ≤ 180 | > 180 ≤ 400 | > 400 | ∢ |
|---|---|---|---|---|---|---|
| Fine | X | 0.5 | 1.0 | 1.5 | 2.0 | ±3° |
| Medium | | 1.0 | 2.0 | 3.0 | 4.0 | |
| Coarse | | 2.0 | 3.5 | 5.0 | 6.5 | |

Tapped Holes acc.

1) Tolerance Class Applied Crossmarked

Copyright WABCO®

| | Date | Signature |
|---|---|---|
| Drawn | 2014-09-17 | Gdula |
| Checked | 2014-10-07 | Kaufmann |
| Expert | Kaufmann | |

WABCO

Test connection

| Mass | Scale | Material No. | Date of first issue: 1995-12-01 | | |
|---|---|---|---|---|---|
| 0.032 KG | 1:1 | 463 705 102 0 | Doc.Code 005 | Language EN | Sheet 1/1 |
| Size A 3 | CAD System Inventor | ECN-No. 165443 / Revision C / Techn. Resp. 5791 | Replacement for | | |

100mm

drw: 463705102001___005 / Version: C00 / state: Approved / mdl: 463705102000___C00