A	B	C	D	E	F	G	H	I	J	K	L	M	N
M16x1,5	M16x1,5	19	13	M12x1,5 ISO 4039-2	13	63,5	20-24-Nm M12x1,5 30-35Nm M16x1,5	acc. ISO3583	HW17	M16x1,5 Hex. 19	M16x1,5 Hex.22	33	with oring

H: recommended torque without lubrication (max. torque) respect max. torque of counter part

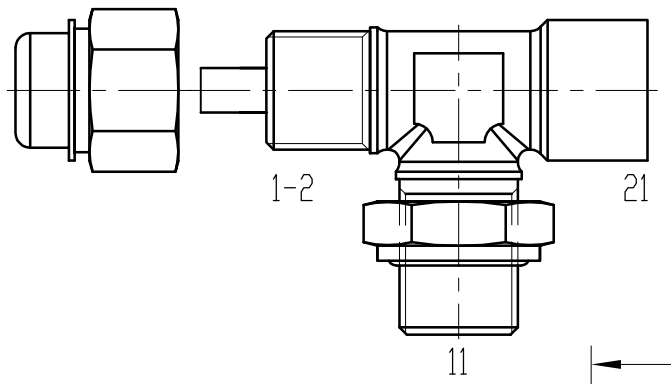

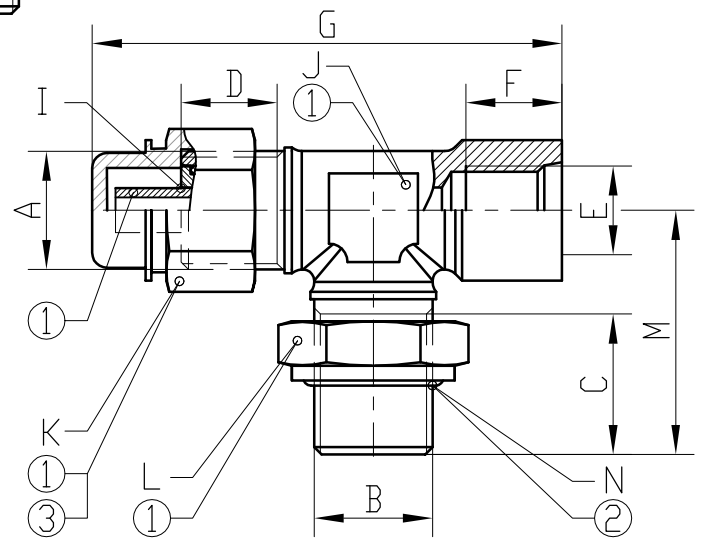

Cleanliness requirement:
No particles >1mm allowed according mandatory standard: JED-334 and JED-593

Material :
1 CuZn
2 EPDM
3 inner components: EPDM, stainless steel, CuZn

General Specification: JED-762 ; JED-334 ; JED-622 ; JED-220 ; JED-367
Engineering related agreements with Supplier have to be mentioned in the "Release of Supplier"

Working medium:	Air acc. to JED-848
Max. working pressure:	14,5 bar
Nominal working pressure:	10bar
Nominal diameter:	4mm
Thermal range of application:	-40°C ... 93°C 1h 120°C without function

Suitable for use in air brake systems for commercial vehicles

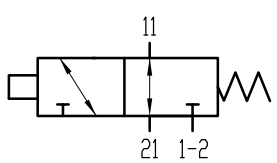

General Specification: JED-334-1 , Size ISO 14405 LP						
Further Technical Data:						
Doc. Code:		Sheet:	To			
General Tolerances JED-261						
		Range of Nominal Dimensions (± mm)				
Class 1)		≤50	> 50 ≤ 180	> 180 ≤ 400	> 400	
Fine	X	0.5	1.0	1.5	2.0	±3°
Medium		1.0	2.0	3.0	4.0	
Coarse		2.0	3.5	5.0	6.5	
Tapped Holes acc.						
1) Tolerance Class Applied Crossmarked						

Copyright WABCO®					
Date	Signature				
Drawn					
2017-03-07	Gdula				
Checked					
2017-03-08	Szczutkowski				
Expert					
Szczutkowski					
Mass	Scale	Material No.		Date of first issue:	2017-03-08
0.146 KG	1:1	463 710 998 0		Doc.Code 005	Language EN / Sheet 1/1
Size	CAD System				
A 3	Inventor	ECN-No. -	Revision -	Techn. Resp. 5791	Replacement for

WABCO

Test connection
3/2 Simulation Valve

100mm

Non è permesso consegnare a terzi o riprodurre questo documento, né utilizzarne il contenuto o renderlo comunque noto a terzi senza autorizzazione esplicita. Ogni infrazione costituirà un evidente abuso e comporterà il risarcimento dei danni subiti. E'fatta riserva di tutti i diritti derivanti da brevetti o modelli.

Copying of this document and giving it to others and the use or communication of the contents thereof, are forbidden without express authority. Contravention of this restriction will constitute an evident abuse and result in a liability to the payment of damages. All rights are reserved in the event of the grant of patent or registration of a utility model or design. This document is the subject of copyright.

Toute Communication ou reproduction de ce document, toute exploitation ou communication de son contenu sont interdites, sauf autorisation expresse. Tout manquement à cette règle constitue un abus évident et expose son auteur au versement de dommages et interets. Tous droits de propriete industrielle reserves, notamment en matiere de brevets et de modèles.

Weitergabe sowie Vervielfältigung dieser Unterlage, Verwertung und Mitteilung ihres Inhalts nicht gestattet, soweit nicht ausdrücklich zugestanden. Zuwiderhandlungen stellen einen offensichtlichen Missbrauch dar und verpflichten zu Schadenersatz. Alle Rechte für den Fall der Patenterteilung oder Gebrauchsmuster-Eintragung vorbehalten.

drw: 4637109980___005 / Version: - / state: Approved / mdl: 4637109980___-