6 H13 $^{+0.180}_{0}$

SURFACE GRAINED
OBERFLAECHE GENARBT
SURFACE GRAINEE
SUPERFICIE GRANULATA

JED-533.063

COLOUR :
FARBE :
COLOR :
COLORE :

RAL 9011

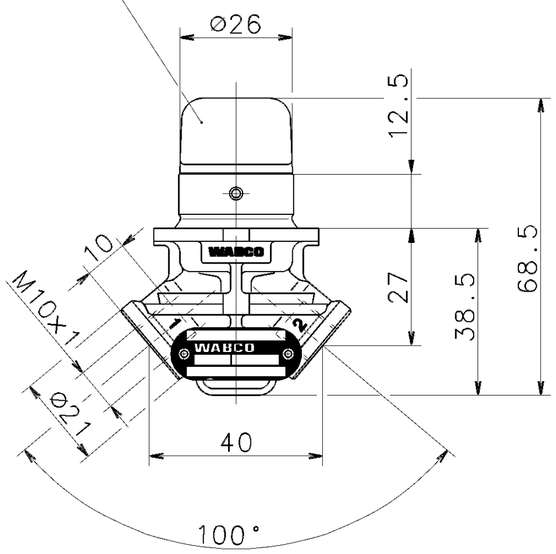

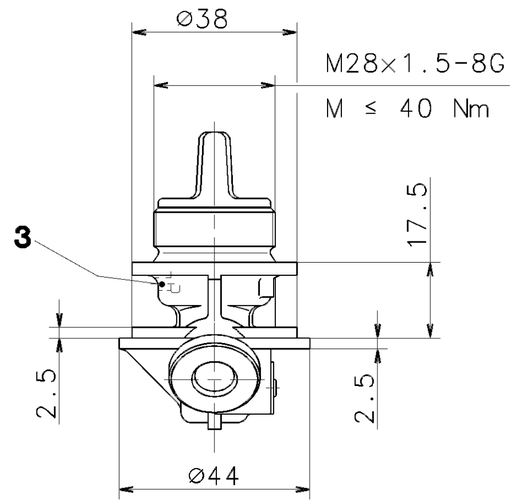

THERMAL RANGE OF APPLICATION :
THERMISCHER ANWENDUNGSBEREICH :
GAMME D'APPLICATION THERMIQUE :
CAMPO DI APPLICAZZIONE THERMICA :
-25°C ... +80°C

NOMINAL DIAMETER :
NENNWEITE :
DIAMETRE NOMINAL :
DIAMETRO NOMINALE :
MIN. 12.6mm² (≙Ø4mm)

MAX. PERMISSIBLE WORKING PRESSURE :
MAX. ZULAESSIGER BETRIEBSDRUCK :
PRESSION D'UTILIZATION MAXI ADMISSIBLE :
PRESSIONE DI ESERCIZIO MAX. AMMISSIBLE :
p_e = 10 bar

OPERATING TORQUE :
DREHMOMENT ZUR BETAETIGUNG :
COUPLE DE COMMANDE :
COPPIA DI COMMANDO :
0.4 Nm

AMBIENT MEDIUM : AIR (CONTAINING WATER, DUST AND OIL)
UMGEBUNGSMEDIUM : LUFT (WASSER, STAUB- UND OELHALTIG)
FLUIDE AMBIANT : AIR (HUMIDE, HUILEUX, POUSSIEREUX)
FLUIDO AMBIENTE : ARIA (ACQUA, POLVERE E OLIO INQUINATO)

WORKING MEDIUM : AIR (CONTAINING WATER AND OIL)
ARBEITSMEDIUM : LUFT (WASSER- UND OELHALTIG)
FLUIDE D'UTILISATION : AIR (HUMIDE ET POUSSIEREUX)
FLUIDO DI ESERCIZIO : ARIA (ACQUA E OLIO INQUINATO)

INSTALLATION POSITION : OPTIONAL
EINBAULAGE : BELIEBIG
POSITION D' INSTALLATION : A VOLONTE
POSIZIONE DI MONTAGGIO : A SCELTA

POSITION : AUTOMATIC RETURN TO POSITION
STELLUNG : AUTOMATISCHE RUECKFUEHRUNG IN STELLUNG
POSITION : RETOUR AUTOMATIQUE A LA POSITION
POSIZIONE : RITORNO AUTOMATICO ALLA POSIZIONE

1 SUPPLY OF ENERGY FROM THE RESERVOIR
ENERGIEZUFLUSS VOM VORRAT
CHARGE D'ENERGIE DU RESERVOIR
ALIMENTAZIONE DI ENERGIA DAL SERBATOIO

2 DELIVERY
ENERGIEABFLUSS IN DIE ARBEITSLEITUNG
UTILISATION
MANDATA

3 EXHAUST
ENTLUEFTUNG
ECHAPPEMENT
SCARICO

BEGINNING OF PRESSURIZING
BELUEFTUNGSBEGINN
DEBUT D' ALIMENTATION
INIZIO DI ALIMENTAZIONE

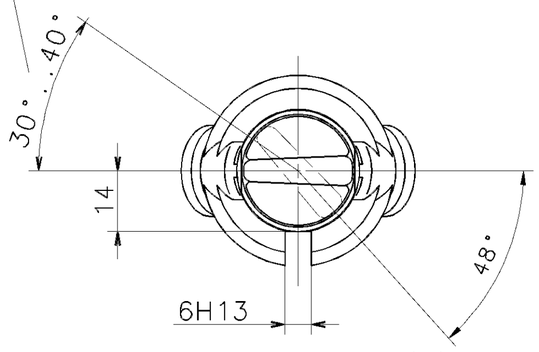

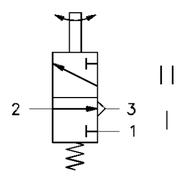

GENERAL SPECIFICATION: JED-334					
FURTHER TECHNICAL DATA:					
DOC. CODE:	SHEET: TO				
GENERAL TOLERANCES					
CLASS 1)	RANGE OF NOMINAL DIMENSIONS (± mm) ≤50	> 50 ≤180	>180 ≤400	>400	∡
FINE	0,5	1,0	1,5	2,0	
MEDIUM	1,0	2,0	3,0	4,0	± 3°
COARSE	2,0	3,5	5,0	6,5	
TAPPED HOLES ACC. ISO 4039 / JED-152					
1) TOLERANCE CLASS APPLIED CROSSMARKED					

DCN-NO.	REV.	DATE
072722	×E	01-06-11

CADAM-DRAWING COPYRIGHT

DATE	SIGNATURE
DRAWN: 01-06-11	VOGES
CHECKED:	DIEKMEYER
STANDARDIZATION:	

WABCO

3/2 DIRECTIONAL CONTROL VALVE
3/2 WEGEVENTIL
DISTRIBUTEUR 3/2
DISTRIBUTORE 3/2

MASS	SCALE	PRODUCT IDENTIFICATION NO.	DOC. CODE	SHEET
0.25 KG	1:1	463 036 003 0	605	1/1
SIZE	I.R.I.			
A 2	140		SHAPE CODE	REPLACEMENT FOR 463 036 003 0/24-05-76

100mm

EXPERT CODE 7 1 9

PRODUCT TYPE 0 0 ☒

1009/012/3/04.93

605/653

TOUTE COMMUNICATION OU REPRODUCTION DE CE DOCUMENT, TOUTE EXPLOITATION OU COMMUNICATION DE SON CONTENU OU RENSEIGNEMENTS QUI EN DONNENT LA POSSIBILITE, SONT INTERDITES SANS AUTORISATION ECRITE PREALABLE. TOUS DROITS DE PROPRIETE INDUSTRIELLE RESERVES. NOTAMMENT EN MATIERE DE BREVETS ET DE MODELES.
WEITERGABE SOWIE VERVIELFAELTIGUNG DIESER UNTERLAGE, WERWERTUNG UND MITTEILUNG IHRES INHALTS NICHT GESTATTET, SOWEIT NICHT AUSDRUECKLICH ZUGESTANDEN. ZUWIDERHANDLUNGEN VERPFLICHTEN ZU SCHADENSERSATZ. ALLE RECHTE FUER DEN FALL DER PATENTERTEILUNG ODER GEBRAUCHSMUSTER-EINTRAGUNG VORBEHALTEN.
NON E PERMESSO CONSEGNARE A TERZI O RIPRODURRE QUESTO DOCUMENTO, NE UTILIZZARNE IL CONTENUTO O RENDERNE ESPLICITI GLI ELEMENTI SENZA AUTORIZZAZIONE SCRITTA. TUTTI I DIRITTI DERIVANTI DA ABUSO COMPORTERA' IL RISARCIMENTO DEI DANNI SUBITI. E' FATTA RISERVA DI TUTTI I DIRITTI DERIVANTI DA BREVETTI O MODELLI.
COPYING OF THIS DOCUMENT AND GIVING IT TO OTHERS AND THE USE OR COMMUNICATION OF THE CONTENTS THEREOF, ARE FORBIDDEN WITHOUT EXPRESS AUTHORITY. OFFENDERS ARE LIABLE TO PAY COMPENSATION. ALL RIGHTS ARE RESERVED IN THE EVENT OF THE GRANT OF PATENT OR REGISTRATION OF A UTILITY MODEL OR DESIGN. THIS DOCUMENT IS THE SUBJECT OF COPYRIGHT.