6 H13 $^{+0.180}_{0}$

SURFACE GRAINED
OBERFLAECHE GENARBT
SURFACE GRAINEE
SUPERFICIE GRANULATA

JED-533.063

COLOUR :
FARBE :
COLOR :
COLORE :

RAL 9011

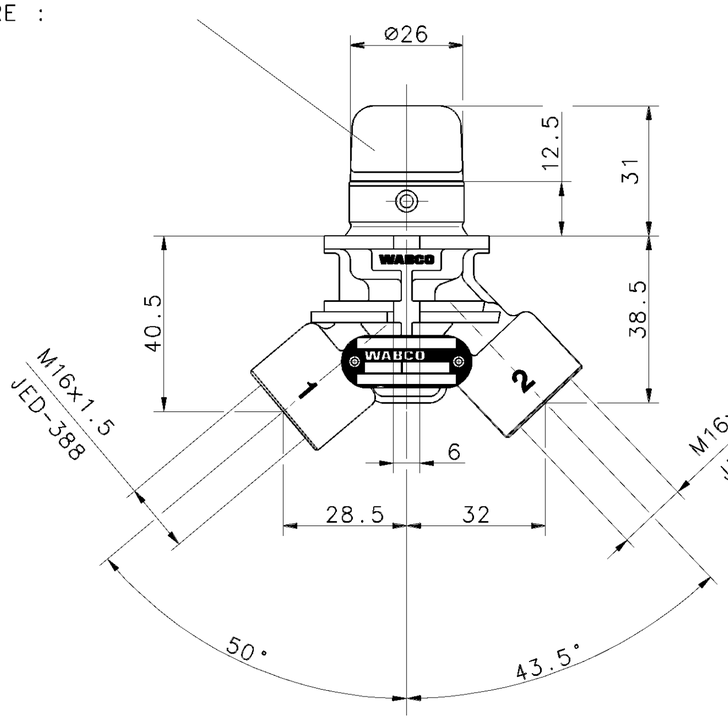

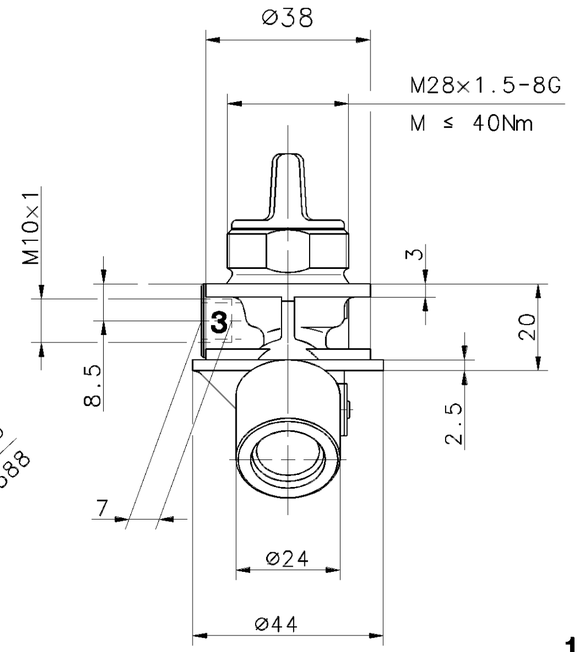

THERMAL RANGE OF APPLICATION THERMISCHER ANWENDUNGSBEREICH GAMME D'APPLICATION THERMIQUE CAMPO DI APPLICAZZIONE THERMICA	-25°C ... +80°C
NOMINAL DIAMETER NENNWEITE DIAMETRE NOMINAL DIAMETRO NOMINALE	MIN. 12.6 mm² (≙Ø4mm)
MAX. PERMISSIBLE WORKING PRESSURE MAX. ZULAESSIGER BETRIEBSDRUCK PRESSION D'UTILIZATION MAXI ADMISSIBLE PRESSIONE DI ESERCIZIO MAX. AMMISSIBLE	p_e = 10 bar
OPERATING TORQUE DREHMOMENT ZUR BETAETIGUNG COUPLE DE COMMANDE COPPIA DI COMMANDO	0.4 Nm
MEDIUM MEDIUM FLUIDE FLUIDO	AIR LUFT AIR ARIA

1 SUPPLY OF ENERGY FROM THE RESERVOIR
ENERGIEZUFLUSS VOM VORRAT
CHARGE D'ENERGIE DU RESERVOIR
ALIMENTAZIONE DI ENERGIA DAL SERBATOIO

2 DELIVERY
ENERGIEABFLUSS IN DIE ARBEITSLEITUNG
UTILISATION
MANDATA

3 EXHAUST
ENTLUEFTUNG
ECHAPPEMENT
SCARICO

BEGINNING OF PRESSURIZING
BELUEFTUNGSBEGINN
DEDUT D'- ALIMENTATION
INIZIO DI ALIMENTAZIONE

POSITION	:	LOCKED
STELLUNG	:	GERASTET
POSITION	:	VERROUILLEE
POSIZIONE	:	INCASTRATA
UNLOCKED	:	AUTOMATIC RETURN TO POSITION
AUSGERASTET	:	AUTOMATISCHE RUECKFUEHRUNG IN STELLUNG
DEVEROUILLEE	:	RETOUR AUTOMATIQUE A LA POSITION
DISINCASTRATO	:	RITORNO AUTOMATICO ALLA POSIZIONE

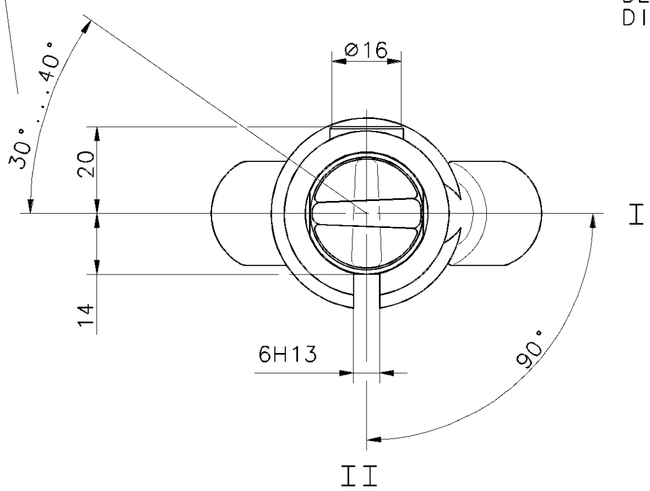

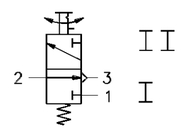

GENERAL SPECIFICATION: JED-334					
FURTHER TECHNICAL DATA:					
DOC. CODE:		SHEET: TO			
GENERAL TOLERANCES					
CLASS 1)	RANGE OF NOMINAL DIMENSIONS (± mm) ≤50	> 50 ≤180	>180 ≤400	>400	∡
FINE	0,5	1,0	1,5	2,0	
MEDIUM X	1,0	2,0	3,0	4,0	± 3°
COARSE	2,0	3,5	5,0	6,5	
TAPPED HOLES ACC. ISO 4039 / JED-152					
1) TOLERANCE CLASS APPLIED CROSSMARKED					

DCN-NO.	REV.	DATE
072722	×J	01-06-11

CADAM-DRAWING COPYRIGHT

DATE	SIGNATURE
DRAWN: 01-06-11	VOGES
CHECKED:	
STANDARDIZATION:	

WABCO

3/2 DIRECTIONAL CONTROL VALVE
3/2 WEGEVENTIL
DISTRIBUTEUR 3/2
VALVOLA 3/2

MASS	SCALE	PRODUCT IDENTIFICATION NO.	DOC. CODE	SHEET
KG	1:1	463 036 005 0	605	1/1
SIZE A 2	I.R.I. 140		SHAPE CODE	REPLACEMENT FOR 463 036 005 0/82-06-09

100mm

EXPERT CODE 7 1 9

PRODUCT TYPE 0

1009/012/3/04.93

605/653

TOUTE COMMUNICATION OU REPRODUCTION DE CE DOCUMENT, TOUTE EXPLOITATION OU COMMUNICATION DE SON CONTENU O. REN-SEIGNEMENTS SUR SES DONNEES TECHNIQUES, SUR LES DROITS DE PROPRIETE INDUSTRIELLE RESERVES, NOTAMMENT EN MATIERE DE BREVETS ET DE MODELES.
WEITERGABE SOWIE VERVIELFAELTIGUNG DIESER UNTERLAGE, VERWERTUNG UND MITTEILUNG IHRES INHALTS NICHT GESTATTET SOWEIT NICHT AUSDRUECKLICH ZugESTANDEN. VERSTOESSE VERPFLICHTEN ZU SCHADENSERSATZ. ALLE RECHTE FUER DEN FALL DER PATENTERTEILUNG ODER GEBRAUCHSMUSTER-EINTRAGUNG VORBEHALTEN.
NON E PERMESSO CONSEGNARE A TERZI O RIPRODURRE QUESTO DOCUMENTO, NE UTILIZZARNE IL CONTENUTO O REN-DERNE NOTI I CONTENUTI. SUI DATI TECNICI, SUI DIRITTI DI PROPRIETA' INDUSTRIALE RISERVATI, NOTAMENTE IN MATERIA DI BREVETTI O MODELLI.
COPYING OF THIS DOCUMENT AND GIVING IT TO OTHERS AND THE USE OR COMMUNICATION OF THE CONTENTS THEREOF ARE FORBIDDEN WITHOUT EXPRESS AUTHORITY. OFFENDERS ARE LIABLE TO THE PAYMENT OF DAMAGES. ALL RIGHTS ARE RESERVED IN THE EVENT OF THE GRANT OF PATENT OR REGISTRATION OF A UTILITY MODEL OR DESIGN.