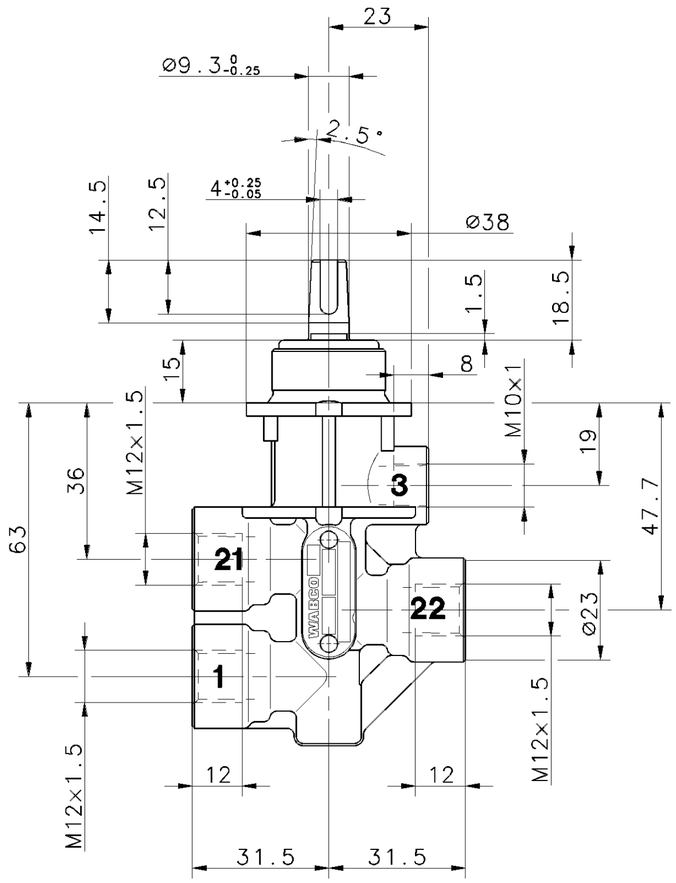

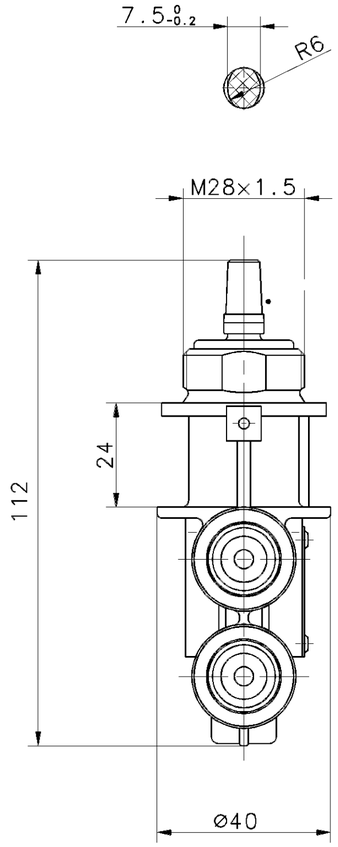

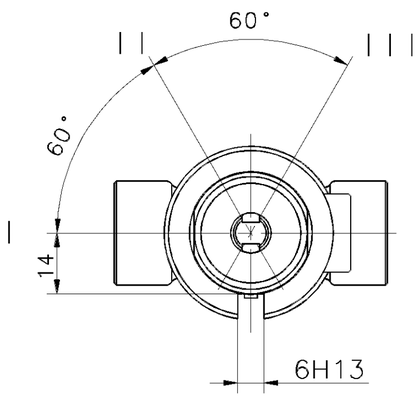

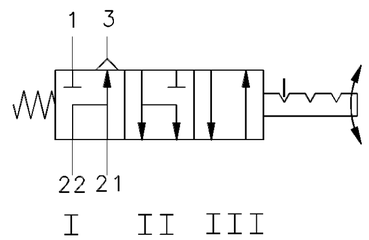

MEDIUM : AIR MEDIUM : LUFT FLUIDE : AIR FLUIDO : ARIA	
OPERATING TORQUE DREHMOMENT ZUR BETAETIGUNG COUPLE DE COMMANDE COPPIA DI COMMANDO	max. 1.5 Nm
THERMAL RANGE OF APPLICATION THERMISCHER ANWENDUNGSBEREICH GAMME D'APPLICATION THERMIQUE CAMPO DI APPLICAZZIONE THERMICA	-40°C ... +80°C
NOMINAL DIAMETER NENNWEITE DIAMETRE NOMINAL DIAMETRO NOMINALE	12.6mm² (≙Ø4)
MAX. PERMISSIBLE WORKING PRESSURE MAX. ZULAESSIGER BETRIEBSDRUCK PRESSION D'UTILIZATION MAXI ADMISSIBLE PRESSIONE DI ESERCIZIO MAX. AMMISSIBLE	p_e = 12 bar

1 SUPPLY
VORRAT
ALIMENTATION
ALIMENTAZIONE

21/22 DELIVERY PRESSURE
AUSGESTEUERTER DRUCK
PRESSION DELIVREE
PRESSIONE EROGATA

3 EXHAUST
ENTLUEFTUNG
ECHAPPEMENT
SCARICO

GENERAL SPECIFICATION:	JED-334
FURTHER TECHNICAL DATA:	
DOC. CODE:	SHEET: TO

GENERAL TOLERANCES

CLASS 1)		RANGE OF NOMINAL DIMENSIONS (± mm) ≤50	> 50 ≤180	>180 ≤400	>400	∡
FINE		0,5	1,0	1,5	2,0	
MEDIUM	X	1,0	2,0	3,0	4,0	± 3°
COARSE		2,0	3,5	5,0	6,5	

TAPPED HOLES ACC. ISO 4039 / JED-152

1) TOLERANCE CLASS APPLIED CROSSMARKED

DCN-NO.	REV.	DATE

CADAM-DRAWING COPYRIGHT

DATE	SIGNATURE
DRAWN: 02-09-02 VOGES	
CHECKED:	
STANDARDIZATION:	

WABCO

4/3 DIRECTIONAL CONTROL VALVE
4/3 WEGEVENTIL
DISTRIBUTEUR 4/3
VALVOLA 4/3

MASS	SCALE	PRODUCT IDENTIFICATION NO.	DOC. CODE	SHEET
0.3 KG	1:1	463 037 008 0	605	1/1
SIZE A 2	I.R.I. 140		SHAPE CODE	REPLACEMENT FOR

100mm

EXPERT CODE 7 1 9

PRODUCT TYPE 0 0 X

1009/012/3/04.93

605/653

TOUTE COMMUNICATION OU REPRODUCTION DE CE DOCUMENT, TOUTE EXPLOITATION OU COMMUNICATION DE SON CONTENU OU RENSEIGNEMENTS SUR CELUI-CI NE SONT PAS AUTORISES SAUF AUTORISATION ECRITE. TOUS DROITS DE PROPRIETE INDUSTRIELLE RESERVES. NOTAMMENT EN MATIERE DE BREVETS ET DE MODELES.

NON E PERMESSO CONSEGNARE A TERZI O RIPRODURRE QUESTO DOCUMENTO, NE UTILIZZARNE IL CONTENUTO O RENDERNE NOTI I CONTENUTI. SE NON PER AUTORIZZAZIONE SCRITTA. SONO RISERVATI I DIRITTI DI PROPRIETA' INDUSTRIALE. ESEMPIO: DIRITTI DI BREVETTI O MODELLI. ABUSO E COMPORTERA' IL RISARCIMENTO DEI DANNI. SUBITI. E' FATTA RISERVA DI TUTTI I DIRITTI DERIVANTI DA BREVETTI O MODELLI.

COPYING OF THIS DOCUMENT AND GIVING IT TO OTHERS AND THE USE OR COMMUNICATION OF THE CONTENTS THEREOF, ARE FORBIDDEN WITHOUT EXPRESS AUTHORITY. OFFENDERS ARE LIABLE TO PAY DAMAGES. ALL RIGHTS ARE RESERVED IN THE EVENT OF THE GRANT OF PATENT OR REGISTRATION OF A UTILITY MODEL OR DESIGN. THIS DOCUMENT IS THE SUBJECT OF COPYRIGHT.

MISSBRAUCH DAR UND VERPFLICHTEN ZU SCHADENSATZ. ALLE RECHTE FUER DEN FALL DER PATENTERTEILUNG ODER GEBRAUCHSMUSTER-EINTRAGUNG VORBEHALTEN.