	MATERIAL / SURFACE PROTECTION WERKSTOFF / OBERFLAECHENSCHUTZ MATIERE / PROTECTION DE SURFACE MATERIALE / PROTEZOINE SUPERFICIALE
a	USt 13 (JED-057M)/ZN-FE (JED-256-1)
b	PA 6.6 35% GF (JED-559)/-
c	4.8 / JED-256-1
d	10.9 / ZN (JED-256-1)
e	PPA 50%GF(JED-775-7)/-
f	STAINLESS STEEL (JED-691-0)/-
g	ALUMINUM (JED-029M1)/JED-259
h	PA66 35%GF (JED-359-0)/-

INSTALLATION POSITION :
EINBAULAGE :
POSITION D' INSTALLATION:
POSIZIONE DI MONTAGGIO :

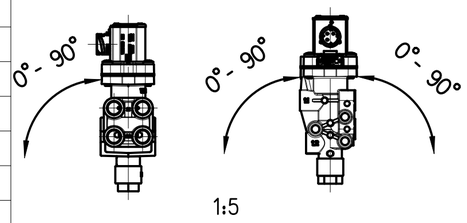

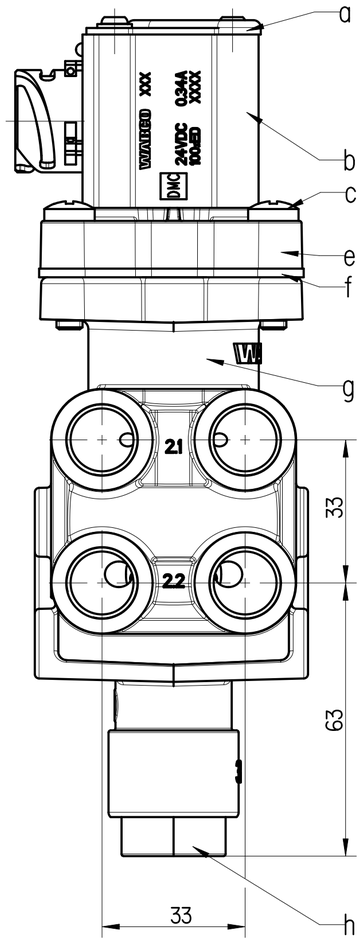

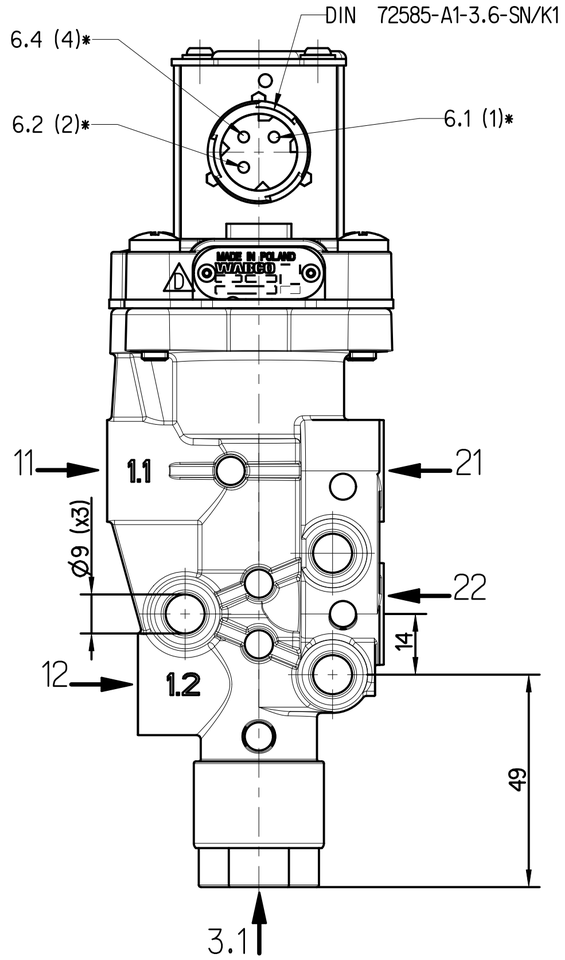

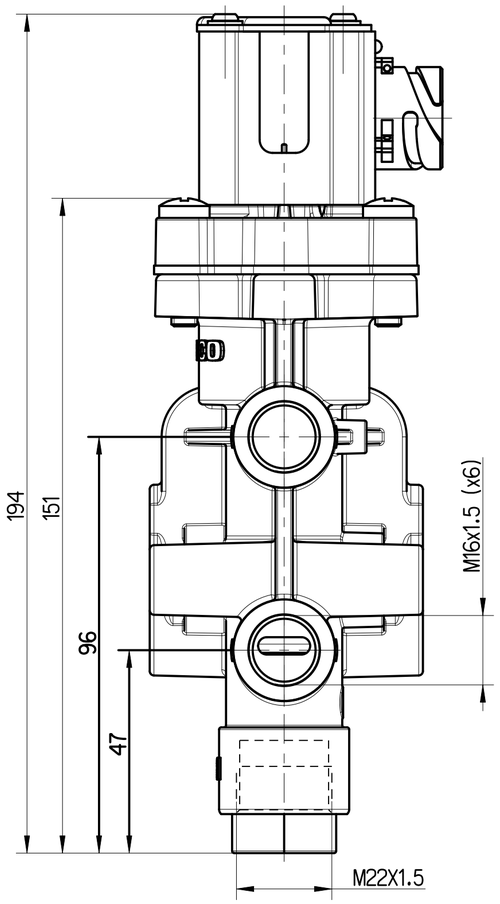

MAINTENANCE REQUIREMENTS : NONE
WARTUNGSANFORUNGEN : KEINE
ENTRETIEN : NON
MANUTENZIONE : NON

SERVICE CONDITION : CONTINUOUS SERVICE
BETRIEBSART : DAUERBETRIEB
CONDITION DU SERVICE : SERVICE CONTINU
CONDIZIONE DI SERVIZIO : SERVIZIO CONTINUO

WORK MEDIUM : AIR (WATER, OIL AND ALCOHOL CONTAINING)
ARBEITSMEDIUM : LUFT (WASSER, OEL UND ALKOHOLHALTIG)
FLUIDE D'UTILISATION : AIR (CHARGE D'EAU, D'HUILTE ETD'ALCOOL)
FLUIDO DI ESERICIZIO : AIR (ACQUOSO, OLEIFERO E ALCOOLOSO)

WORKING ENVIRONMENT : AIR (WATER AND SALT CONTAINING)
UMGEBUNGSMEDIUM : LUFT (WASER UND SALZHAL TIG)
FLUIDE AMBIANTE : AIR (CHARGE D.EAU DE SELJ)
FLUIDO AMBIENTE : ARIA (CONTENENTE ACQUA E SALE)

THERMAL RANGE OF APPLICATION UNDER NORMAL
AMBIENT CONDITIONS
THERMISCHER ANWENDUNGSBEREICH UNTER
NORMALEN UMGEBUNGSBEDINGUNGEN -40°C .... +80°C
PLAGE DE TEMPERATURE EN UTILISATION
CONTINUE DE CAMPO D' APPLICAZIONE TERMICA NELLE
NORMALI CONDIZIONI AMBIENTALI

WORK PRESSURE (SUPPLY)
BETRIEBSDRUCK (VORRAT) :pe = 5....13 bar
PRESION D'UTILIZATION (ALIMENTATION)
PRESSIONE DI ESERCIZIO (ALIMENTAZIONE)

MAX. DYNAMIC PRESSURE (SERVICE LINE):
MAX. DYNAMISCHER DRUCK (ARBEITSLEITUNG):
PRESSION DYNAMICUE MAXI MAXI (CONOUITE DE SORTIE): p = 20bar
PRESSIONE DINAMICA MAX. (CONDOTTA D' USCITA):

TYPE OF PROTECTION ACC. TO DIN 40050 :
SCHUTZART NACH DIN 40050 : IP 6K9K
MODE DE PROTECTION SUIVANT DIN 40050 :
TIPO DI PROTEZIONE SECONDO DIN 40050 :

SECURITY AGAINST THE CONFUSING OF POLES : EXISTING
VERPOLSICHERHEIT : VORHANDEN
DISPOSITIF DE TROMPEUR DE POLES : EXISTANT
SICUREZZA CONTRO L' INVERSIONE DEI POLI : ESISTENTE

PROTECTION CLASS :
SCHUTZKLASSE : III
CLASSE DE PROTECTION :
CLASSE DI PROTEZIONE :

SHORT TERM RESISTANCE TO HEAT WITHOUT VOLTAGE
KURZZEITIGE WAERMEBESTAENDIGKEIT OHNE SPANNUNG
RESISTANCE A LA CHALEUR A COURTE DUREE MAX 1h AT 110°C SANS VOLTAGE
RESISTENZA AL CALORE BREVE TEMPO SQLO SENZA VOLTAGGIO

VOLTAGE
SPANNUNG 24±6V
VOLTAGE
VOLTAGGIO

NOMINAL CURRENT AT ROOM TEMPERATURE :
NENNSTROM BEI RAUMTEMPERATUR :
COURANT NOMINAL A LA TEMPERATURE AMBIANTE : In = 0.22 A
CORRENTE NOMINAL ALLA TEMPERATURA AMBIENTE :

TYPE OF CURRENT : DIRECT CURRENT
STROMART : GLEICHSTROM
NATURE DU COURANT : COURANT CONTINU
NATURA DELLA CORRENTE : CORRENTE CONTINUA

PRESSURE AT PORT 31 :
DURCH AM ANSCHLUSS 31 : MAX. 3bar
PRESSION I'ORIFICIE 31 :
PRESSIONE ALL'ORIFIZIO 31 :

TORQUE FOR CONNECTIONS:
ANZUGSMOMENT FUER EINSCHRAUBSTUTZEN:
COUPLE SERRAGE DES RACCORDS: M16x1.5 : Mmax = 34 Nm
COPPIA DI SERRAGGIO DEI RACCORDI: M22X1.5 : Mmax = 34 Nm

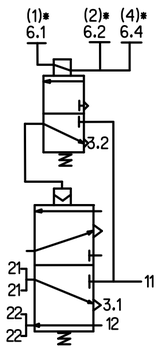

* SOCKET
GERAETESTEKOCKDOSE
PRISE DE COURANT
PRESA DI CORRENTE

11: SUPPLY, ENERGIEZUFLUSS VOM VORRAT, ALIMENTATION, ALIMENTAZIONE

12,21,22: DELIVERY, ARBEITSLEITUNG, UTILISATION, MANDATA

3.1,3.2: EXHAUST,ANSCHLUSS ATMOSPHAERE, ECHAPPEMENT,SCARICO

6.1,6.2,6.4: ELECTRONIC CONNECTOR,ELEKTRONIKSTECKER CONNECTEUR ÉLECTRONIQUE,CONNETTORE ELETTRONICO

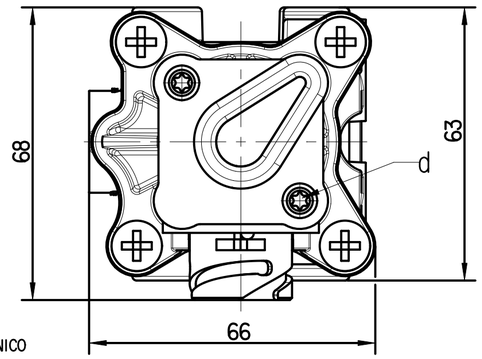

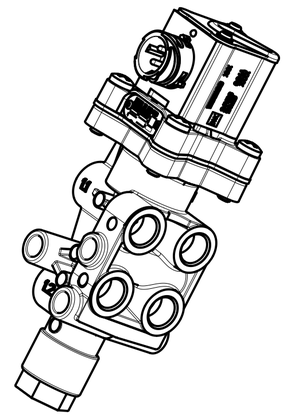

PORT ANSCHLUSS ORIFICE ORIFIZIO	NOMINAL DIAMETER NENNWEITE DIAMETRE NOMINAL DIAMETRO NOMINALE	MIN. FLOW PASSAGE MIN. DURCHFLUSSOEFFNUNC MIN. ORIFICE CALIBRE MIN. PASSAGGIO LIBERO
11	-	28 mm²
12	-	45 mm²
21	2xØ3	14 mm²
22	2xØ6	56 mm²
3	-	39 mm²

General Specification: ISO 8015, JED-334-1, Size ISO 14405 LP
Further Technical Data: 4630840310 doc. 035
Doc. Code: Sheet: To

General Tolerances JED-261

Class 1)		Range of nominal dimensions in mm ≤ 50	> 50 ≤ 180	> 180 ≤ 400	> 400	∢
Fine		±0.5	±1	±1.5	±2	±3°
Medium	X	±1	±2	±3	±4	
Coarse		±2	±3.5	±5	±6.5	

Tapped Holes acc. JED-152
1) Tolerance Class Applied Crossmarked

Copyright ZF®

	Date	Signature
Drawn	2026-06-10	Balaga
Checked	2026-06-10	Piskadlo

Dimensions in mm

LIFT AXLE CONTROL VALVE

Mass	Scale	Material No.	Date of first issue: 2006-11-21
0,9 kg	1:1 (1:2)	463 084 031 0	Doc.Code 005 / Language ML / Sheet 1/1
Size A 2	CAD System CREO	ECN-No. 521416 / Revision 2 x D / Techn. Resp. 5812	Replacement for

100mm

Non è permesso consegnare a terzi o riprodurre questo documento, ne utilizzarne il contenuto o renderlo comunque noto a terzi senza autorizzazione esplicita. Ogni infrazione costituirà un evidente abuso e comporterà il risarcimento dei danni subiti. E'fatto riserva di tutti i diritti derivanti da brevetti o modelli.

Copying of this document and giving it to others and the use or communication of the contents thereof, are forbidden without express authority. Contravention of this restriction will constitute an evident abuse and result in a liability to the payment of damages. All rights are reserved in the event of the grant of patent or registration of a utility model or design. This document is the subject of copyright.

Toute Communication ou reproduction de ce document, toute exploitation ou communication de son contenu sont interdites, sauf autorisation expresse. Tout manquement à cette règle constitue un abus évident et expose son auteur au versement de dommages et interets. Tous droits de propriété industrielle reservés, notamment en matiere de brevets et de modèles.

Weitergabe sowie Vervielfältigung dieser Unterlage, Verwertung und Mitteilung ihres Inhalts nicht gestattet, soweit nicht ausdrücklich zugestanden. Zuwiderhandlungen stellen einen offensichtlichen Mißbrauch dar und verpflichten zu Schadenersatz. Alle Rechte fuer den Fall der Patenterteilung oder Gebrauchsmuster-Eintragung vorbehalten.

drw: 4630840310 ..... 035 Version: D.2 / state: Under Review / mdl: 4630840310 ..... A02