	MATERIAL / SURFACE PROTECTION WERKSTOFF / OBERFLAECHENSCHUTZ MATIERE / PROTECTION DE SURFACE MATERIALE / PROTEZOINE SUPERFICIALE
a	PA6T/6I GF50 (JED-775-7) / -
b	ALUMINUM (JED-029-M1) / ZN (JED-259-0)
c	4.8 (JED-051M1) / ZN-NI (JED-739-4)
d	STAINLESS STEEL (JED-691-0) / -
e	STEEL (JED-057M0) / ZN-FE (JED-256-1)
f	PA6.6 GF35 (JED-559) / -
g	10.9 (JED-051M5) / ZN-FE (JED-256-1)
h	PA6.6 GF35 (JED-359-1) / -

<1> SAFETY CHARACTERISTICS	0
<2> SIGNIFICANT CHARACTERISTICS	0
<CI> CUSTOMER INTERFACE	0

INSTALLATION POSITION:
EINBAULAGE:
POSITION D' INSTALLATION:
POSIZIONE DI MONTAGGIO:

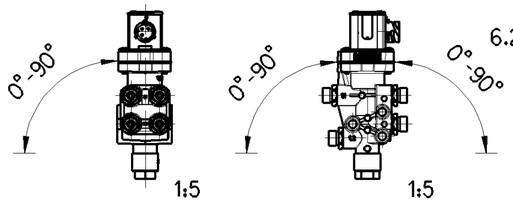

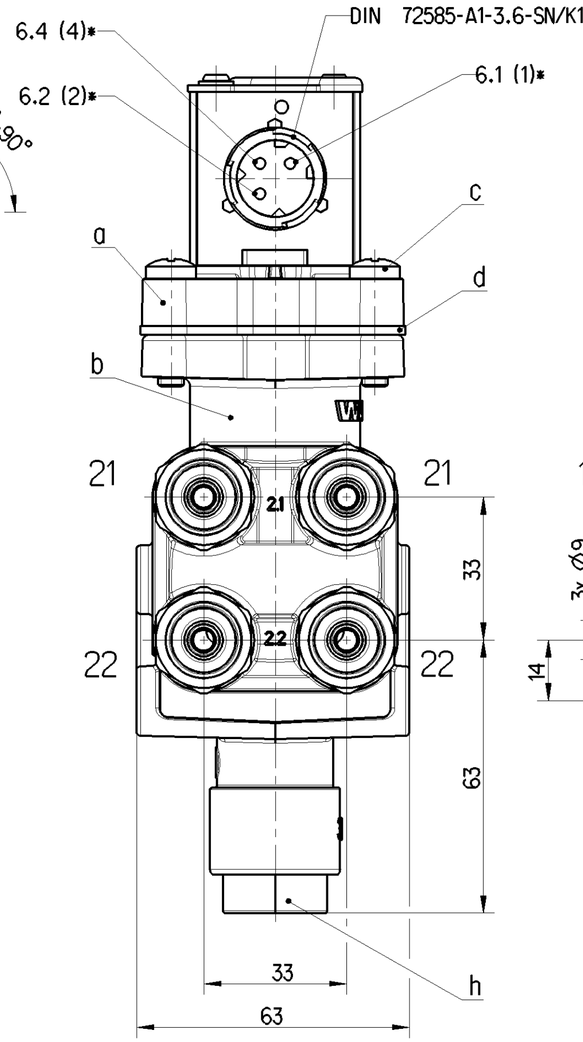

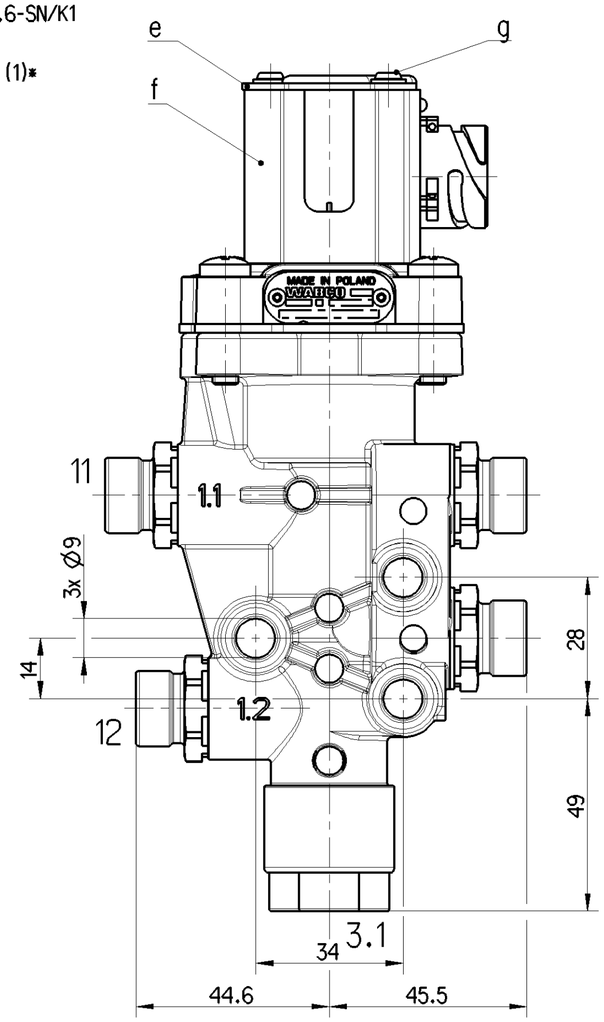

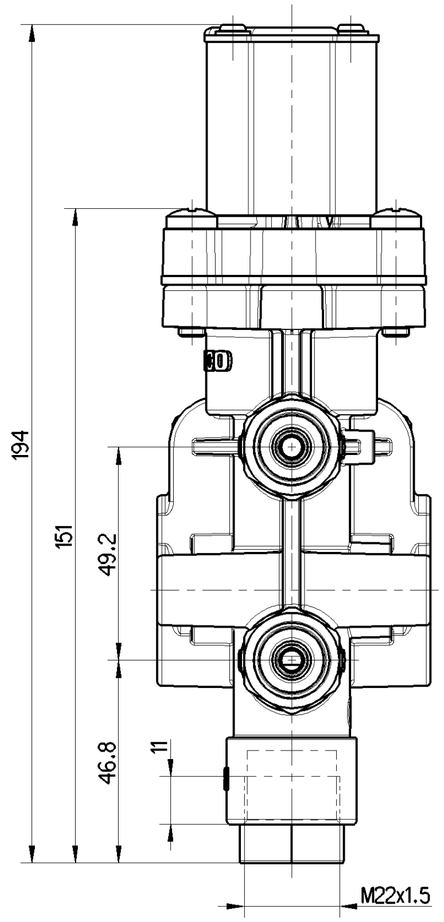

NOMINAL CURRENT AT ROOM TEMPERATURE:
NENNSTROM BEI RAUMTEMPERATUR:
COURANT NOMINAL A LA TEMPERATURE AMBIANTE:
CORRENTE NOMINAL ALLA TEMPERATURA AMBIENTE: In = 0.22 A

VOLTAGE:
SPANNUNG: 12V±3
VOLTAGE:
VOLTAGGIO:

TYPE OF CURRENT: DIRECT CURRENT
STROMART: GLEICHSTROM
NATURE DU COURANT: COURANT CONTINU
NATURA DELLA CORRENTE: CORRENTE CONTINUA

PRESSURE AT PORT 31:
DURCH AM ANSCHLUSS 31: Max. 3bar
PRESSION I'ORIFICIE 31:
PRESSIONE ALL'ORIFIZIO 31:

MAINTENANCE REQUIREMENTS: NONE
WARTUNGSANFORUNGEN: KEINE
ENTRETIEN: NON
MANUTENZIONE: NON

SERVICE CONDITION: CONTINUOUS SERVICE
BETRIEBSART: DAUERBETRIEB
CONDITION DU SERVICE: SERVICE CONTINU
CONDIZIONE DI SERVIZIO: SERVIZIO CONTINUO

WORK MEDIUM: AIR (WATER, OIL AND ALCOHOL CONTAINING)
ARBEITSMEDIUM: LUFT (WASSER, OEL UND ALKOHOL ENHALTEN)
FLUIDE D'UTILISATION: AIR (D'EAU, D'HUILE ET D'ALCOOL CONTENANT)
FLUIDO DI ESERICIZIO: AIRA (ACQUA, OLIO E ALCOL CONTENENTI)

WORKING ENVIRONMENT: AIR (WATER, SALT, DUST AND OIL CONTAINING)
UMGEBUNGSMEDIUM: LUFT (WASSER, SALZ, STAUB UND OEL ENTHALTEN)
FLUIDE AMBIANTE: AIR (D'EAU, SEL, POUSSIERE ET D'HUILE CONTENANT)
FLUIDO AMBIENTE: ARIA (ACQUA, SALE, POLVERE E OLIO CONTENENTI)

THERMAL RANGE OF APPLICATION
UNDER NORMAL AMBIENT CONDITIONS:
THERMISCHER ANWENDUNGSBEREICH
UNTER NORMALEN UMGEBUNGSBEDINGUNGEN: -40°C ... +65°C
GAME D'APPLICATION TERMIQUE
DANS DES CONDITIONS AMBIANTES NORMALES:
CAMPO DI APPLICAZIONE TERMICA
NELLE NORMALI CONDIZIONI AMBIENTALI

WORK PRESSURE (SUPPLY):
BETRIEBSDRUCK (VORRAT): pe = 5...13 bar
PRESION D'UTILIZATION (ALIMENTATION):
PRESSIONE DI ESERCIZIO (ALIMENTAZIONE):

MAX. DYNAMIC PRESSURE (SERVICE LINE):
MAX. DYNAMISCHER DRUCK (ARBEITSLEITUNG): p = 20bar
PRESSION DYNAMICUE MAXI MAXI (CONOUITE DE SORTIE):
PRESSIONE DINAMICA MAX. (CONDOTTA D' USCITA):

TYPE OF PROTECTION ACC. TO DIN 40050:
SCHUTZART NACH DIN 40050: IP 6K9K
MODE DE PROTECTION SUIVANT DIN 40050:
TIPO DI PROTEZIONE SECONDO DIN 40050:

SECURITY AGAINST THE CONFUSING OF POLES: EXISTING
VERPOLSICHERHEIT: VORHANDEN
DISPOSITIF DE TROMPEUR DE POLES: EXISTANT
SICUREZZA CONTRO L' INVERSIONE DEI POLI: ESISTENTE

PROTECTION CLASS:
SCHUTZKLASSE: III
CLASSE DE PROTECTION:
CLASSE DI PROTEZIONE:

SHORT TERM RESISTANCE TO HEAT
KURZZEITIGE WAERMEBESTAENDIGKEIT MAX 1h AT 110°C
RESISTANCE A LA CHALEUR A COURTE DUREE
RESISTENZA AL CALORE BREVE TEMPO SQLO

WITHOUT VOLTAGE
OHNE SPANNUNG
SANS VOLTAGE
SENZA VOLTAGGIO

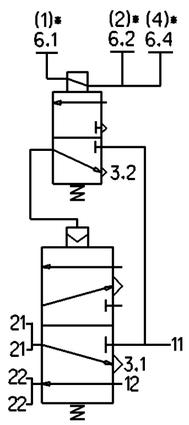

* SOCKET
GERAETESTEKOCKDOSE
PRISE DE COURANT
PRESA DI CORRENTE

11 SUPPLY, ENERGIEZUFLUSS VOM VORRAT,
ALIMENTATION, ALIMENTAZIONE

12, 21, 22 DELIVERY, ARBEITSLEITUNG,
UTILISATION, MANDATA

3.1, 3.2 EXHAUST, ANSCHLUSS ATMOSPHAERE,
ECHAPPEMENT, SCARICO

6.1, 6.2, 6.4 ELECTRONIC CONNECTOR, ELEKTRONIKSTECKER
CONNECTEUR ÉLECTRONIQUE, CONNETTORE ELETTRONICO

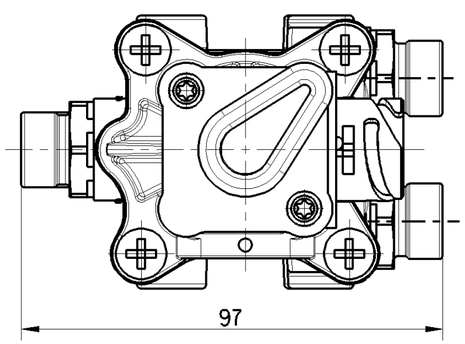

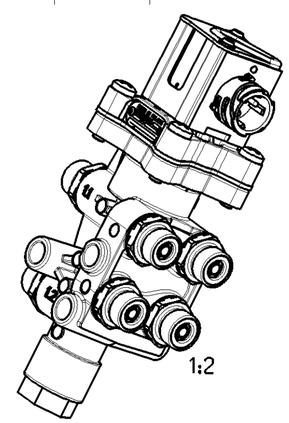

PORT ANSCHLUSS ORIFICE ORIFIZIO	NOMINAL DIAMETER NENNWEITE DIAMETRE NOMINAL DIAMETRO NOMINALE	MIN. FLOW PASSAGE MIN. DURCHFLUSSOEFFNUNG MIN. ORIFICE CALIBRE MIN. PASSAGGIO LIBERO	PUSH-IN COUPLING GERADER STECKVERBINDER UNION MALE RACCORDO AD INNESTO RAPIDO	DIAMETER OF PIPE ROHRDURCHMESSER DIAMETRE DU TUBE DIAMETRO DEL TUBO	DEPTH OF INSERTION EINSTECKTIEFE DES ROHRES PROFONDEUR D'INSERTION PROFONDITA D'INTRODUZIONE [mm]
11	-	28 mm²	X	8x1	20.5
12	-	45 mm²	X	8x1	20.5
21	2 x Ø3	14 mm²	X	8x1	20.5
22	2 x Ø6	56 mm²	X	8x1	20.5
3.1	-	39 mm²	-	-	-

General Specification: JED-334-1 , Size ISO 14405 LP						
Further Technical Data: 463 084 031 0						
Doc. Code: 035		Sheet: 1 To 11				
General Tolerances JED-261						
		Range of Nominal Dimensions (± mm)				
Class 1)		≤ 50	> 50 ≤ 180	> 180 ≤ 400	> 400	∢
Fine		0.5	1.0	1.5	2.0	±3°
Medium	X	1.0	2.0	3.0	4.0	
Coarse		2.0	3.5	5.0	6.5	
Tapped Holes acc. JED-152						
1) Tolerance Class Applied Crossmarked						

Copyright WABCO®

	Date	Signature
Drawn	2020-04-17	Piskadlo
Checked	2020-04-17	Szyszka
Expert	Piskadlo	

WABCO

LIFT AXLE CONTROL VALVE
LIFTACHSSTEURVENTIL
VALVE ESSIEU LEVABLE
VALVOLA ASSE SOLLEVATORE

Mass	Scale	Material No.	Date of first issue: 2020-04-17
0.85 KG	1:1 1:5 1:2	463 084 061 0	Doc.Code 005 / Language ML / Sheet 1/1
Size A 2	CAD System CREO	ECN-No. - / Revision - - / Techn. Resp. 5812	Replacement for -

100mm

Tout Communication ou reproduction de ce document, toute exploitation ou communication de son contenu sont interdites, sauf autorisation expresse. Tout manquement à cette règle constitue un deus evident et expose son auteur au versement de dommages et interets. Tous droits de propriete industrielle reserves, notamment en matiere de brevets et de modèles.

Weitergabe sowie Verwertung dieser Unterlage, Verwertung und Mitteilung ihres Inhalts nicht gestattet, soweit nicht ausdrücklich zugestanden. Zuwiderhandlungen stellen einen offenschlichen Mustraub dar und verpflichten zu Schadenersatz. Alle Rechte fuer den Fall der Patenterteilung oder Gebrauchsmuster-Eintragung vorbehalten.

Non e permesso consegnare a terzi o riprodurre questo documento, ne utilizzarne il contenuto o renderlo comunque noto a terzi senza autorizzazione esplicita. Ogni infrazione costituira un evidente abuso e comportera il risarcimento dei danni subiti. E'fatto riserva di tutti i diritti derivanti da brevetti o modelli.

Copying of this document and giving it to others and the use or communication of the contents thereof, are forbidden without express authority. Contravention of this restriction will constitute an evident abuse and result in a liability to the payment of damages. All rights are reserved in the event of the grant of patent or registration of a utility model or design. This document is the subject of copyright.