	MATERIAL AND SURFACE PROTECTION			
A	AL (JED-029M1) /C (JED-259)	E	8.8 /ZN (JED-256)	
B	FE (JED-057M) /ZN (JED-256)	F	PA 6.6 (JED-354.1)	
C	PA 6.6 35GF (JED-559)	G	AL	Ⓑ
D	ZN (JED-004M) /C (JED-260)			

THE VALVE CORRESPONDS TO THE REGULATIONS FOR ELECTROMAGNETIC DEVICES ACCORDING TO VDE 0580
GERAET ENTSPRICHT DEN BESTIMMUNGEN FUER ELEKTROMAGNETISCHE GERAETE NACH VDE 0580
LA VALVE CORRESPOND AUX CONDITIONS POUR DES APPAREILS ELECTROMAGNETIQUES SUIVANT VDE 0508
LA VALVOLA CORRESPONDE ALLE CONDIZIONI PER APPARECCHI ELEKTROMAGNETICHI SECONDO VDE 0580

1.1 WORKING MEDIUM
ARBEITSMEDIUM
FLUIDE D'UTILISATION
FLUIDO DI ESERCIZIO
: AIR / LUFT / AIR / ARIA — PERMISSIBLE CONTAMINATIONS SEE JED-848

1.2 WORKING ENVIRONMENT
UMGEBUNGSMEDIUM
FLUIDE AMBIANTE
FLUIDO AMBIENTE
: AIR (WATER- AND SALT CONTAINING)
LUFT (WASSER- UND SALZHALTIG)
AIR (CHARGE D'EAU DE SEL)
ARIA (ACQUOSO E SALIFERO)

2.1 THERMAL RANGE OF APPLICATION
UNDER NORMAL AMBIANT CONDITIONS
THERMISCHER ANWENDUNGSBEREICH
UNTER NORMALEN UMGEBUNGSBEDINGUNGEN
PLAGE DE TEMPERATURE EN
UTILISATION CONTINUE DE
CAMPO D'APPLICAZIONE TERMICA NELLE
NORMALI CONDIZIONI AMBIENTALI
: -40°...+65°C

2.2 SHORT TERM RESISTANCE TO HEAT
KURZZEITIGE WAERMEBESTAENDIGKEIT
RESISTANCE A LA CHALEUR A COURTE DUREE
RESISTANZA AL CALORE BREVE TEMPO SOLO
: MAX. 1h
AT / BEI / EN / IN 110°C — WITHOUT VOLTAGE / OHNE SPANNUNG / SANS VOLTAGE / SENZA VOLTAGGIO

3.1 WORKING PRESSURE (SUPPLY)
BETRIEBSDRUCK (VORRAT)
PRESSION D'UTIZATION (ALIMENTATION)
PRESSIONE DI ESERCIZIO (ALIMENTAZIONE)
: p_e = 5. . .13 bar

3.2 MAX. DYNAMIC PRESSURE (SERVICE LINE)
MAX. DYNAMISHER DRUCK (ARBEITSLEITUNG)
PRESSION DYNAMIQUE MAX. (CONDUITE DE SORTIE)
PRESSIONE DINAMICA MAX. (CONDOTTA D'USCITA)
: p_e= 20 bar

4 MIN. FLOW PASSAGE /NOMINAL DIAMETER
MIN. DURCHFLUSSOEFFNUNG /NENNWEITE
MIN. ORIFICE CALIBRE /DIAMETERE NOMINAL
MIN. PASSAGGIO LIBERO /DIAMETRO NOMINALE

4.1 PORT 1,21,22
ANSCHLUSS 1,21,22
ORIFICE 1,21,22
ORIFIZIO 1,21,22
: 78 mm² (≙Ø10mm)

4.2 PORT 23,24,25
ANSCHLUSS 23,24,25
ORIFICE 23,24,25
ORIFIZIO 23,24,25
: 50.28 mm² (≙Ø8mm)

4.3 PORT 32
ANSHLUSS 32
ORIFICE 32
ORIFIZIO 32
: 59 mm² (≙Ø8.7mm)

5 INSTALLATION LIMITATIONS
EINBAUBESCHRAENKUNGEN
RESTRICTIONS D'INSTALLATION
LIMITAZIONE DI MONTAGGIO
: ** AT THE TOP, PREFERABLY / OBEN, VORZUGSWEISE / EN HAUT, PREFERENCE / VERSO IL ALTO, PREFERENZA
*** AT THE TOP / OBEN / EN HAUT / VERSO IL ALTO

6 MAINTENANCE REQUIREMENTS
WARTUNGSANFORDERUNGEN
ENTRETIEN
MANUTENZION
: NONE / KEINE / NON / NON

7 VOLTAGE
SPANNUNG
VOLTAGE
VOLTAGGIO
: 24 V +6 V -4.4 V

8 TYPE OF CURRENT
STROMART
NATURE DU COURANT
NATURA DELLA CORRENTE
: DIRECT CURRENT / GLEICHSTROM / COURANT CONTINU / CORRENTE CONTINUA

9 SERVICE CONDITION
BETRIEBSART
CONDITION DU SERVICE
CONDIZIONE DI SERVIZIO
: 100% ED/5 min

10 SECURITY AGAINST THE CONFUSING OF POLES
VERPOLSICHERHEIT
DISPOSITIF DE TROMPEUR DE POLES
SICUREZZA CONTRO L'INVERSIONE DEI POLI
: EXISTING / VORHANDEN / EXISTANT / ESISTENTE

11 NOMINAL CURRENT AT ROOM TEMPERATURE
NENNSTROM BEI RAUMTEMPERATUR
COURANT NOMINAL A LA TEMPERATURE AMBIANTE
CORRENTE NOMINAL ALLA TEMPERATURA AMBIENTE
: $I_N \leq 0.34$ A

12 TYPE OF PROTECTION ACC. TO IEC 529
SCHUTZART NACH IEC 529
MODE DE PROTECTION SUIVANT IEC 529
TIPO DI PROTEZIONE SECONDO IEC 529
: IP 6K6K

13 PROTECTION CLASS
SCHUTZKLASSE
CLASSE DE PROTECTION
CLASSE DI PROTEZIONE
: III — * SOCKET / GERAETESTECKDOSE / PRISE DE COURANT / PRESA DI CORRENTE

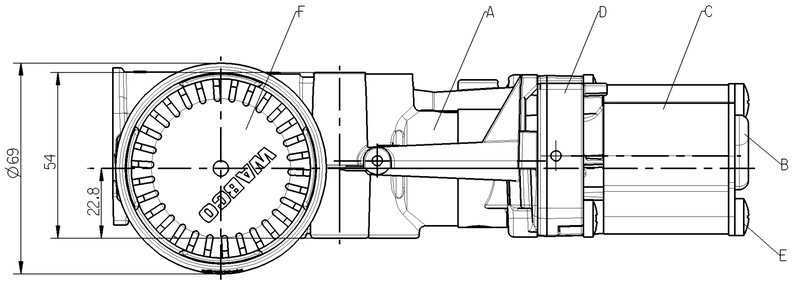

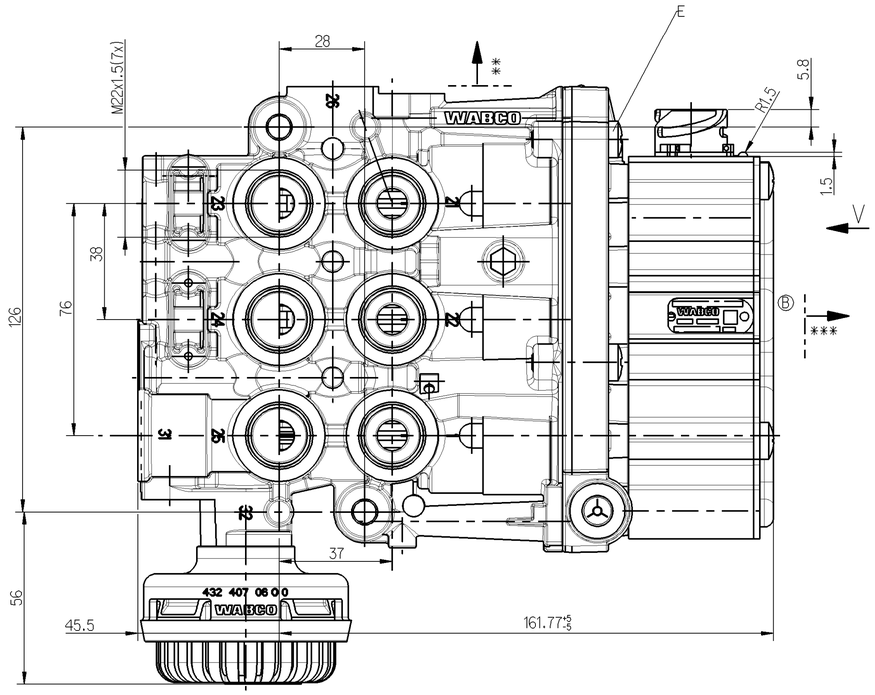

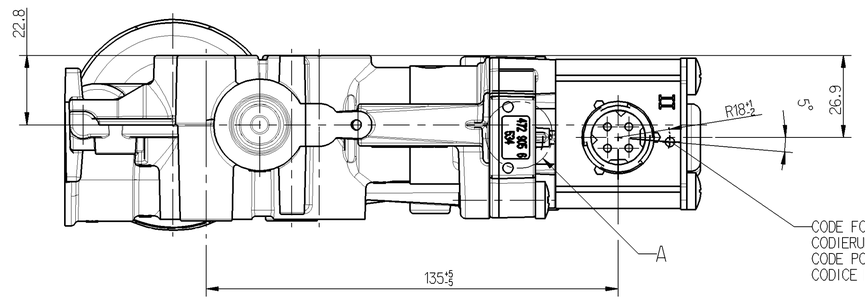

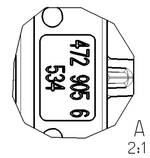

1 SUPPLY, ENERGIEZUFLUSS VOM VORRAT, ALIMENTATION, ALIMENTAZIONE
21,22,23,24,25 DELIVERY, ARBEITSLEITUNG, UTILISATION,MANDATA
32 EXHAUST, ANSCHLUSS ATMOSPHAERE, ECHAPPEMENT, SCARICO
62,1,62.2,62.3,62.4 ELECTRICAL CONTROL, ELEKTRISCHER STEUERANSCHLUSS, COMMANDE ELETTRIQUE, COMANDO ELETTRICO

① MANUFACTURING PLANT :
PRODUKTIONSSTAETTE : JED-225
LIEU DE FABRICATION :
LUOGO DI FABBRICAZIONE :

② WEEK OF MANUFACTURE / YEAR OF MANUFACTURE
FERTIGUNGSWOCHE / FERTIGUNGSJAHR
SEMAINE DE FABRICATION / ANNÉE DE FABRICATION
SETTIMANA DI FABBRICAZIONE / ANNO DI FABBRICAZIONE

③ WABCO DEVICE NUMBER
WABCO-GERÄTE NR.
NUMÉRO DE L'APPAREIL WABCO
NUMERO DELL' APPARECCHIO WABCO

④ CUSTOMER NO.
KUNDEN-NR.
NUMÉRO DU CLIENT
NUMERO CLIENTE

⑤ DATA MATRIX CODE
DATA MATRIX CODE ISO/IEC 16022
DATA MATRIX CODE
DATA MATRIX CODE

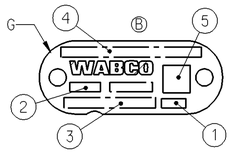

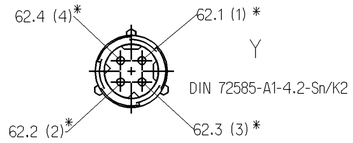

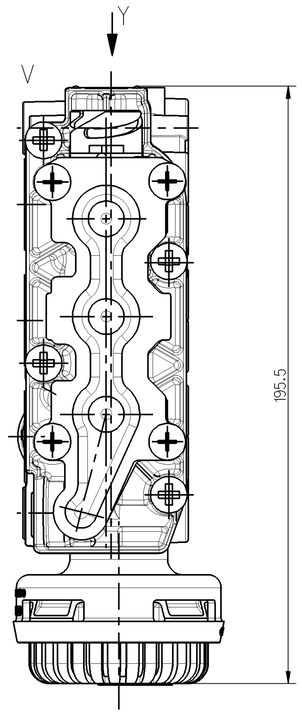

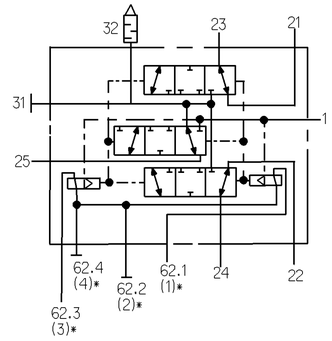

General Specification: JED-334-0			
Further Technical Data:			
Doc. Code:	Sheet:	To	

General Tolerances JED-261

Class 1)	Range of Nominal Dimensions (± mm) ≤ 50	> 50 ≤ 180	> 180 ≤ 400	> 400	∡
Fine	0.5	1.0	1.5	2.0	
Medium	1.0	2.0	3.0	4.0	±3°
Coarse X	2.0	3.5	5.0	6.5	

Tapped Holes acc. JED-152
1) Tolerance Class Applied Crossmarked

Copyright WABCO®

Date	Signature
Drawn 2013-07-24	Balaga
Checked 2013-07-29	Hladik
Expert Buczylko	

WABCO

Solenoid Valve
Magnetventil (LACV-IC)
Electrovalve
Electrovalvola

Mass	Scale	Material No.	Date of first issue: 2008-05-08
2.3 KG	1:1	463 084 100 0	Doc.Code 005 / Language ML / Sheet 1/1
Size A 1	CAD System Pro/E	ECN-No. 157905 / Revision 3 x B / Techn. Resp. 5812	Replacement for

100mm

Tous droits réservés. Tout manquement à cette règle constitue un délit, ouvrant le contrevenant à des poursuites judiciaires. Par ailleurs, le contrevenant est tenu de réparer les dommages causés.
Alle Rechte sind vorbehalten. Jeder Verstoß gegen diese Bestimmung ist strafbar und verpflichtet zu Schadensersatz.
Tutti i diritti sono riservati. Ogni violazione costituisce un illecito penale e comporta il dovuto risarcimento.
Copyright of this document and giving it to others and the use or communication of the contents thereof, are forbidden without express authority. Contravention of this restriction will constitute an evident abuse and result in a liability to the payment of damages. All rights are reserved in the event of the grant of a patent or the registration of a utility model or design. This document is the subject of copyright.