	MATERIAL	SURFACE PROTECTION
I	POM	
II	EPDM	
III	STEEL	Zn
IV	STEEL	Zn
V	Zn Alloy	Cr III
VI	STEEL	Zn
VII	STEEL	Zn

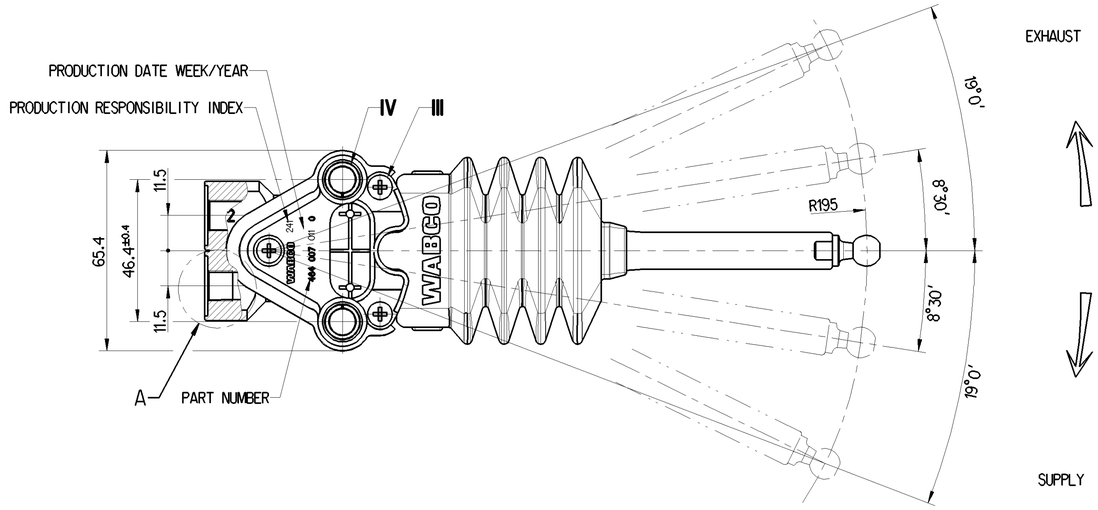

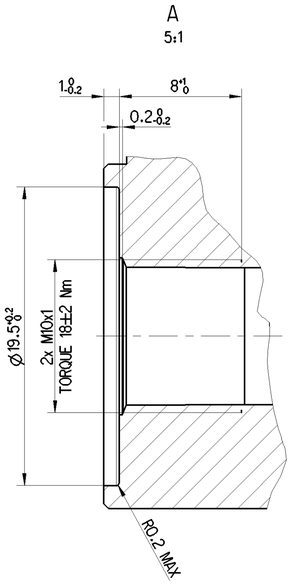

FLOW RATE FOR : P1=8 bar and P1=11 bar

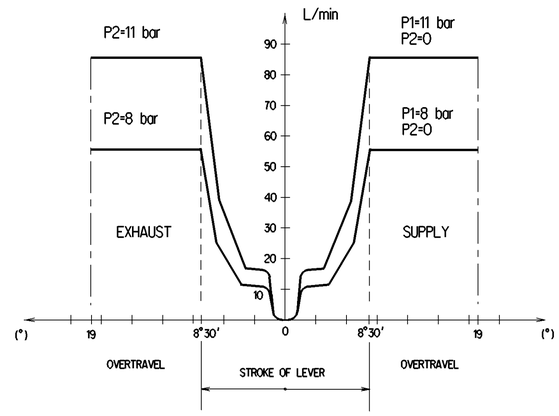

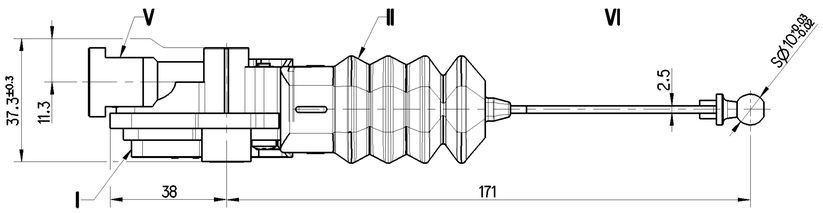

1 SUPPLY	
2 DELIVERY	
THERMAL RANGE	-40°C ... +80°C
WORKING PRESSURE	P1= 11 bar MAX.
EXCEPTIONAL INLET PRESSURE	P1= 14 bar MAX.
RESIDUAL PRESSURE	P2= 0.6±0.3 bar

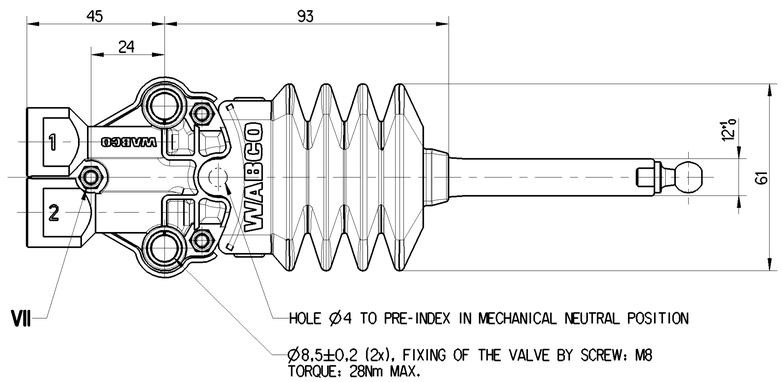

SYMBOL

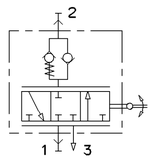

General Specification: JED-334-1 , Size ISO 14405 LP					
Further Technical Data:					
Doc. Code:		Sheet:		To	
General Tolerances JED-261					
Range of Nominal Dimensions (± mm)					
Class 1)	≤ 50	> 50 ≤ 180	> 180 ≤ 400	> 400	
Fine	0.5	1.0	1.5	2.0	±3°
Medium	1.0	2.0	3.0	4.0	
Coarse	2.0	3.5	5.0	6.5	
Tapped Holes acc.					
1) Tolerance Class Applied Crossmarked					

Copyright WABCO®

Date	Signature
Drawn 2020-03-11	Yang
Checked 2020-03-12	Zak
Expert Repela	

WABCO

LEVELLING VALVE

Mass	Scale	Material No.	Date of first issue: -	
0.374 KG	1:1	464 007 011 0	Doc.-Code 005	Language EN / Sheet 1/1
Size A 1	CAD System CREO	ECN-No. 502082 / Revision - H / Techn. Resp. 5642	Replacement for	

100mm

Toute Communication ou reproduction de ce document, toute exploitation ou communication de son contenu sont interdites, sauf autorisation écrite. Tous droits de propriété industrielle réservés, notamment en matière de brevets et de modèles.

Non è permesso consegnare o fare o riprodurre questo documento, né utilizzarne il contenuto o renderlo comunque noto a terzi senza autorizzazione scritta. Tutti i diritti di proprietà industriale sono riservati, in particolare quelli di brevetto e di modello.

Copying of this document and giving it to others and the use or communication of the contents thereof, are forbidden without express authority. Proprietary rights are reserved in the event of the grant of patent or registration of a utility model or design. This document is the subject of copyright.

Weitergabe sowie Vervielfältigung dieser Unterlage, Verwertung und Mitteilung ihres Inhalts nicht gestattet, soweit nicht ausdrücklich zugesichert. Gewerbliche Schutzrechte vorbehalten. Ausschließlich für Schutzrechtsanmeldung, Gebrauchsmuster- oder Geschmacksmustereintragung verbindlich.

Copyright WABCO®