	MATERIAL	SURFACE PROTECTION
I	POM	
II	EPDM	
III	STEEL	Zn
IV	STEEL	Zn
V	POM Ⓓ	
VI	STEEL	Zn
VII	STEEL	Zn
VIII	POM	
IX	STEEL	Zn
X	STEEL	Zn
XI	STEEL	Zn
XII	STEEL	Zn
XIII	STEEL	Zn

ASSEMBLY CONDITION

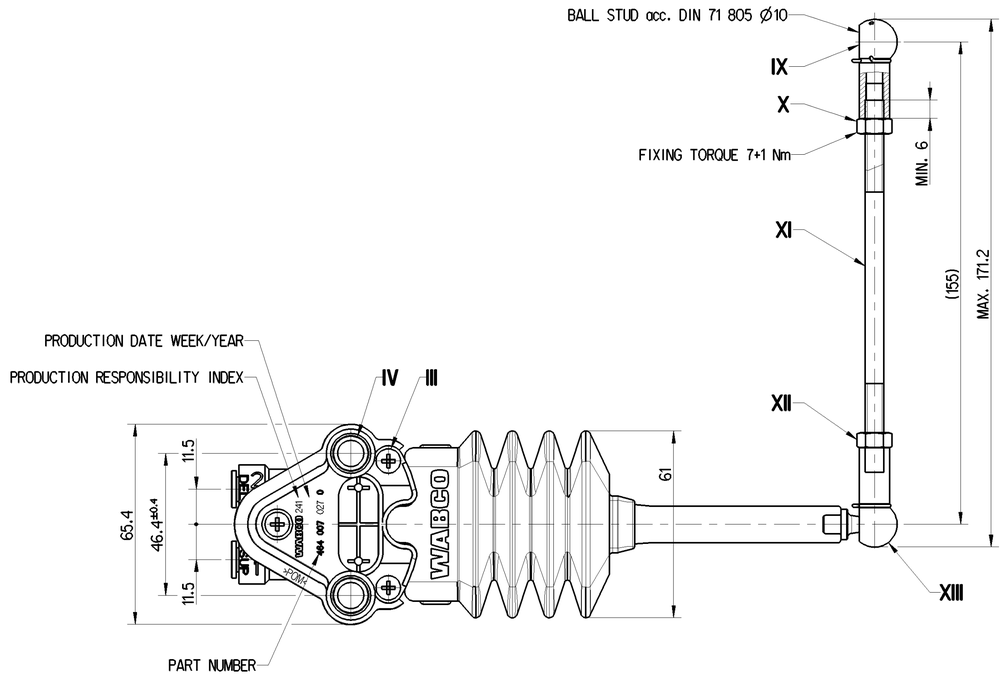

DELIVERY CONDITION

MAXIMUM LENGTH OF CONNECTING ROD HAS TO BE RESPECTED
TO ENSURE MINIMUM THREAD ENGAGEMENT
OF CONNECTION ROD TO BALL JOINT AT VALVE

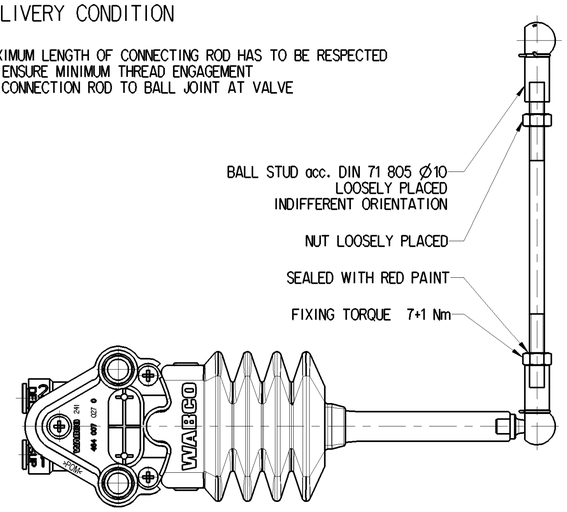

FLOW RATE FOR : P1=8 bar and P1=11 bar

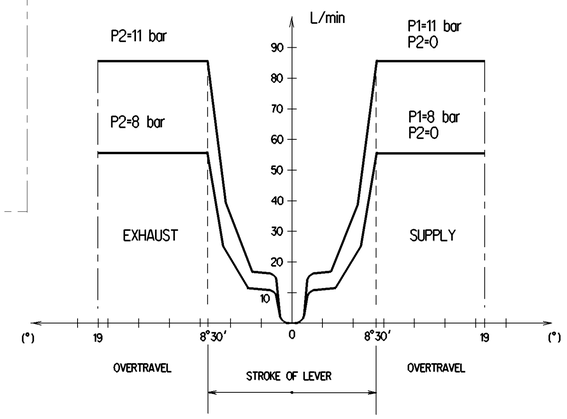

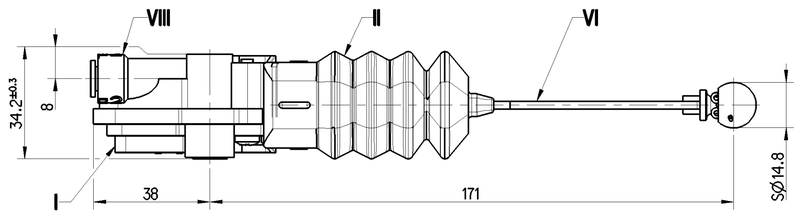

1 SUPPLY	
2 DELIVERY	
THERMAL RANGE	-40°C ... +80°C
WORKING PRESSURE	P1= 11 bar MAX.
EXCEPTIONAL INLET PRESSURE	P1= 14 bar MAX.
RESIDUAL PRESSURE	P2= 0.6±0.3 bar

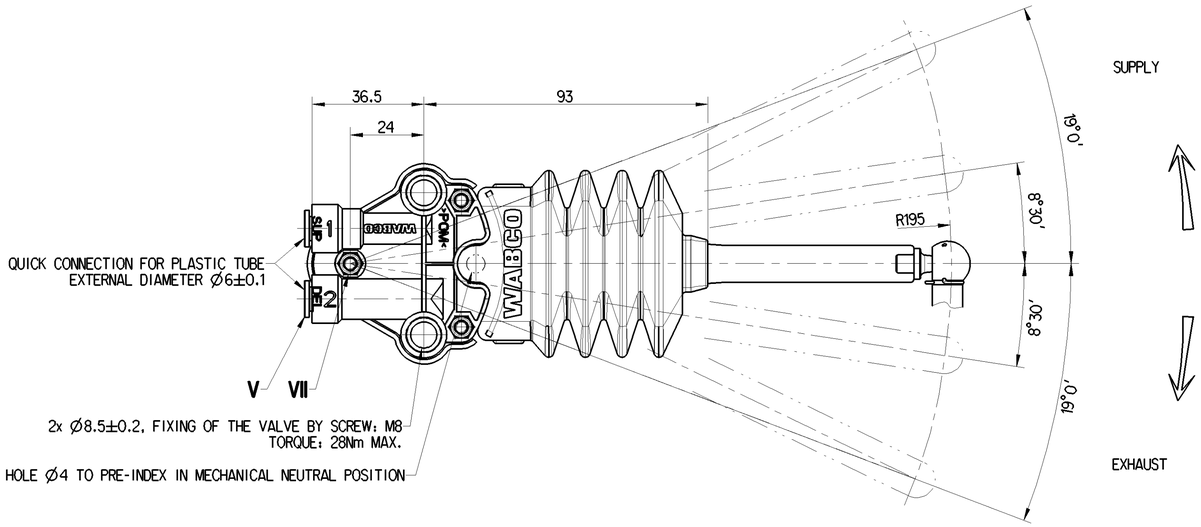

SYMBOL

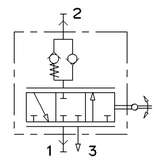

General Specification: JED-334-1 , Size ISO 14405 LP					
Further Technical Data:					
Doc. Code:		Sheet:		To	
General Tolerances JED-261					
	Range of Nominal Dimensions (± mm)				
Class 1)	≤ 50	> 50 ≤ 180	> 180 ≤ 400	> 400	
Fine	0.5	1.0	1.5	2.0	±3°
Medium	1.0	2.0	3.0	4.0	
Coarse	2.0	3.5	5.0	6.5	
Tapped Holes acc.					
1) Tolerance Class Applied Crossmarked					

Copyright WABCO®

Date	Signature
Drawn 2018-07-13	Repela
Checked 2018-07-26	Zak
Expert	Repela

WABCO

LEVELLING VALVE

Mass	Scale	Material No.	Date of first issue: 2011-01-21		
0.276 KG	1:1	464 007 027 0	Doc.Code 005	Language EN	Sheet 1/1
Size A 1	CAD System CREO	ECN-No. 176250	Revision 1 x D	Techn. Resp. 5642	Replacement for 884 014 668 0

100mm

Toute Communication ou reproduction de ce document, toute exploitation ou communication de son contenu sont interdites, sauf autorisation écrite. Tous droits de propriété intellectuelle réservés, notamment en matière de brevets et de modèles.

Weitergabe sowie Vervielfältigung dieser Unterlage, Verwertung und Mitteilung ihres Inhalts sind gestattet, soweit nicht ausdrücklich untersagt. Gewerbliche Schutzrechte vorbehalten, insbesondere Patent- und Gebrauchsmustereintragung vorbehalten.

Non è permesso consegnare o fare la riproduzione ulteriore di questo documento, né utilizzare il contenuto o renderlo comunque noto a terzi senza esplicita autorizzazione. Si riservano i diritti di proprietà intellectuale, in particolare diritti di brevetto o modello.

Copying of this document and giving it to others and the use or communication of the contents thereof, are forbidden without express authority. Offenders are liable to the payment of damages. All rights are reserved in the event of the grant of patent or registration of a utility model or design. This document is the subject of copyright.