	MATERIAL	SURFACE PROTECTION
I	POM	
II	EPDM	
III	STEEL	Zn
IV	STEEL	Zn
V	POM Ⓓ	
VI	STEEL	Zn
VII	STEEL	Zn
VIII	POM	

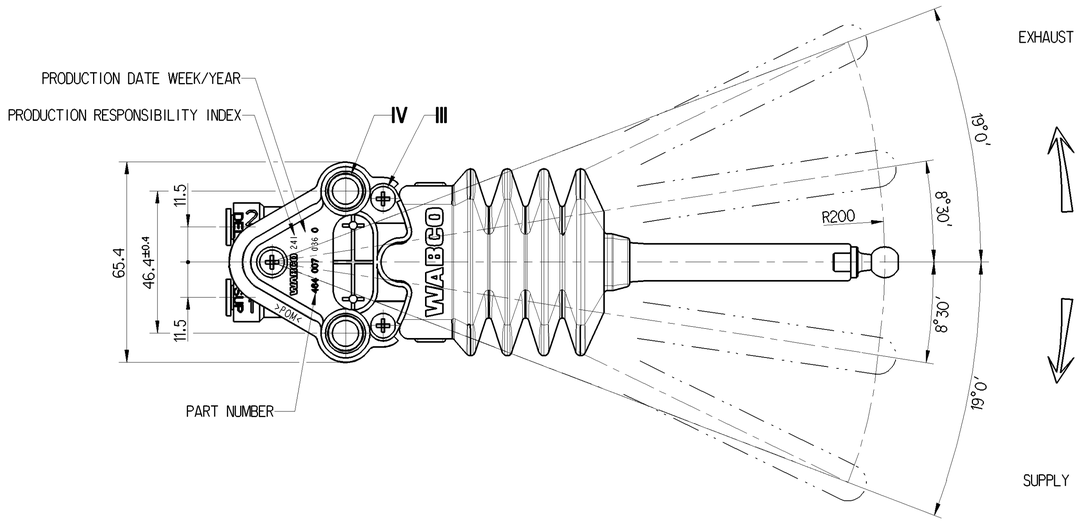

FLOW RATE FOR : P1=8 bar and P1=11 bar

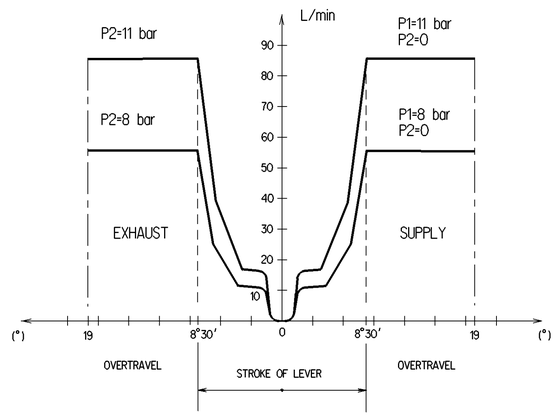

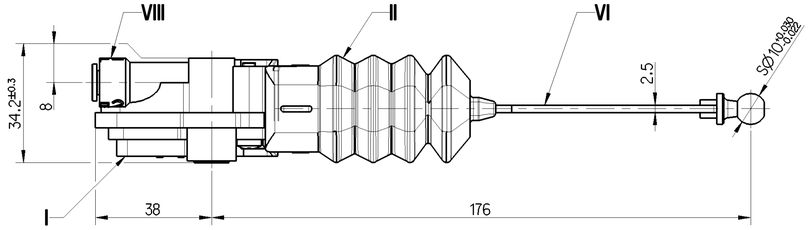

1	SUPPLY	
2	DELIVERY	
THERMAL RANGE		-40°C ... +80°C
WORKING PRESSURE		P1= 11 bar MAX.
EXCEPTIONAL INLET PRESSURE		P1= 14 bar MAX.
RESIDUAL PRESSURE		P2= 0.6±0.3 bar

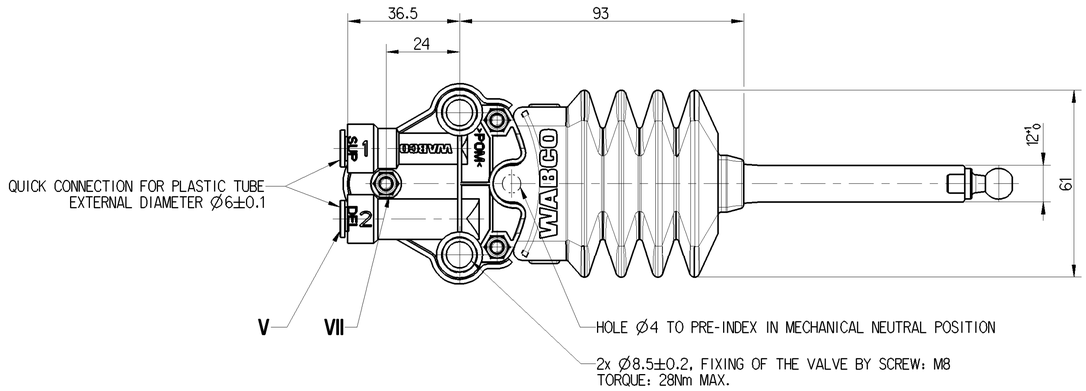

SYMBOL

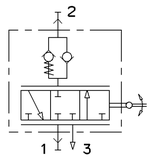

General Specification: JED-334-1 , Size ISO 14405 LP					
Further Technical Data:					
Doc. Code:		Sheet:		To	
General Tolerances JED-261					
	Range of Nominal Dimensions (± mm)				
Class 1)	≤ 50	> 50 ≤ 180	> 180 ≤ 400	> 400	
Fine	0.5	1.0	1.5	2.0	±3°
Medium	1.0	2.0	3.0	4.0	
Coarse	2.0	3.5	5.0	6.5	
Tapped Holes acc.					
1) Tolerance Class Applied Crossmarked					

Copyright WABCO®

Date	Signature
Drawn	
2018-07-11	Repela
Checked	
2018-07-26	Zak
Expert	
Repela	

WABCO

LEVELLING VALVE

Mass	Scale	Material No.	Date of first issue: 2012-02-21		
0.213 KG	1:1	464 007 036 0	Doc.Code	Language	Sheet
Size	CAD System		005	EN	1/1
A 1	CREO				

ECN-No.	Revision	Techn. Resp.	Replacement for
176250	1 x D	5642	-

100mm

Toute Communication ou reproduction de ce document, toute exploitation ou communication de son contenu sont interdites, sauf autorisation écrite. Tous droits de propriété industrielle réservés, notamment en matière de brevets et de modèles.

Weitergabe sowie Vervielfältigung dieser Unterlage, Verwertung und Mitteilung ihres Inhalts nicht gestattet, soweit nicht ausdrücklich zugesichert. Gewerbliche Schutzrechte sind vorbehalten, insbesondere für Patent- und Gebrauchsmustereintragungen.

Non è permesso consegnare o farsi a riprodurre questo documento, né utilizzarne il contenuto o renderlo comunque noto a terzi senza esplicita autorizzazione. Ogni proprietà industriale è riservata, in particolare quella di brevetto e di registrazione di modelli.

Copying of this document and giving it to others and the use or communication of the contents thereof, are forbidden without express authority. Industrial property rights are reserved, in particular those of patent and registration of a utility model or design. This document is the subject of copyright.