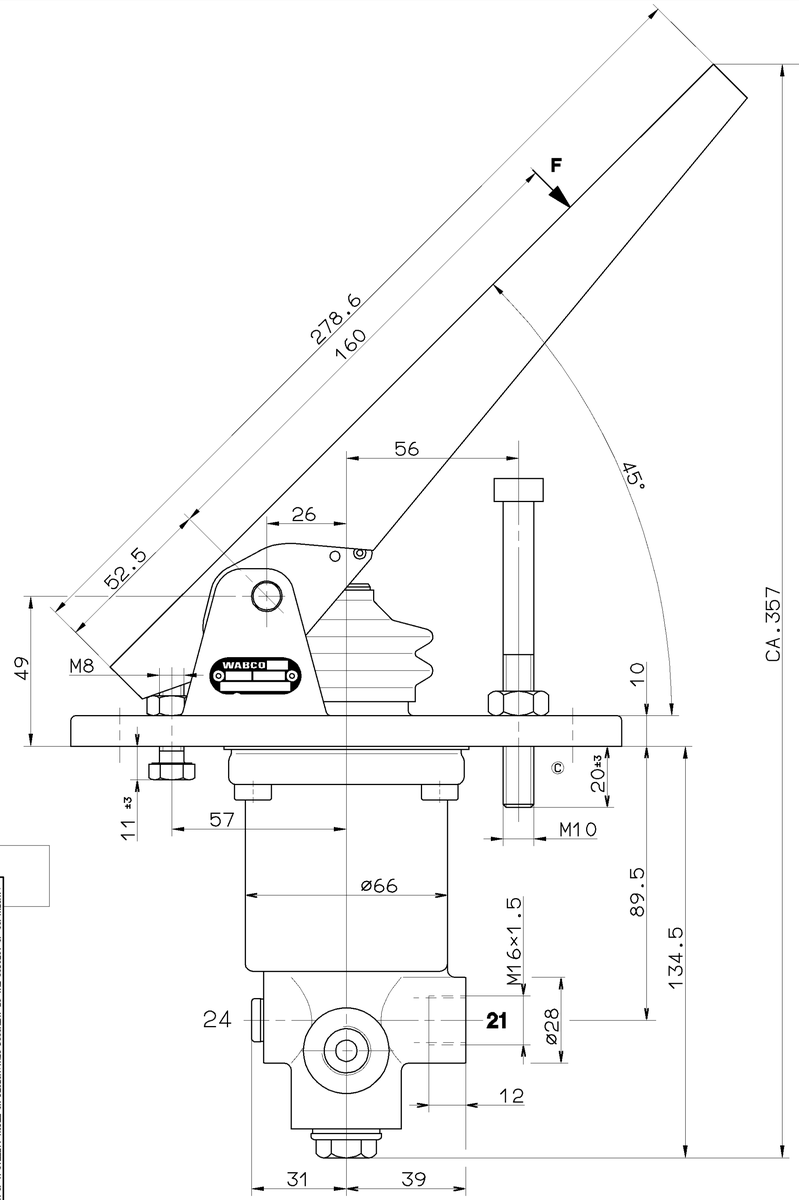

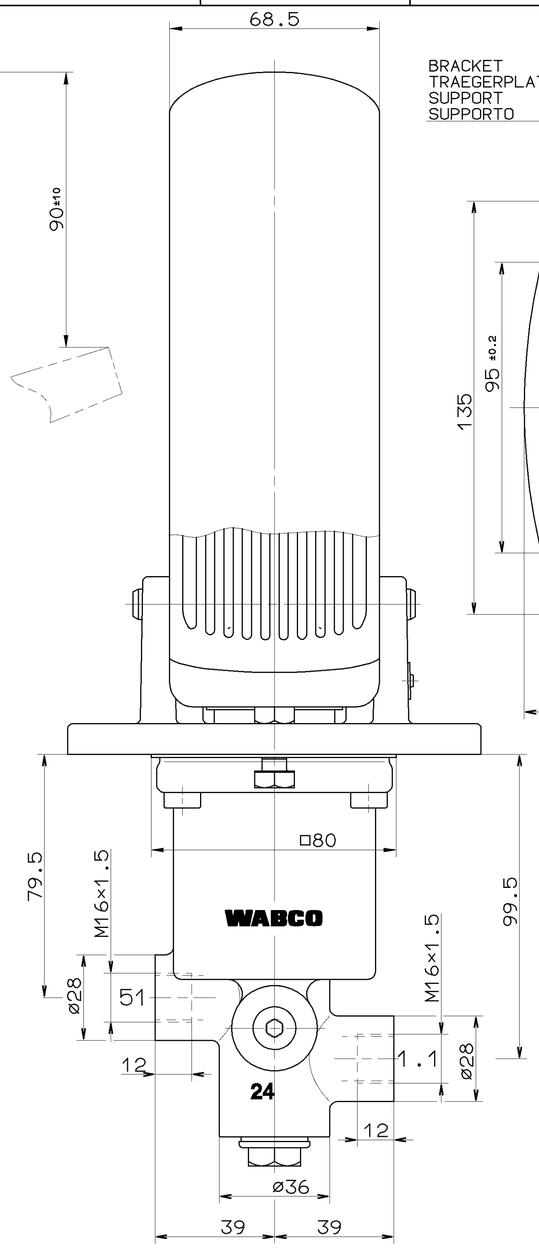

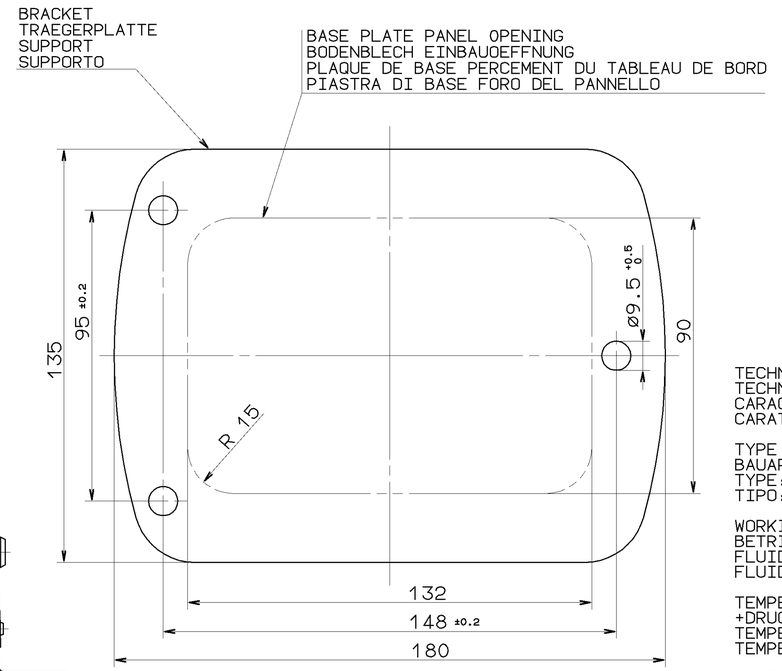

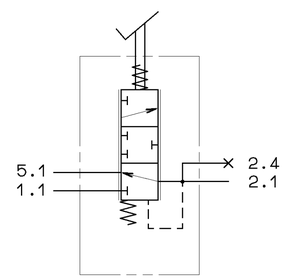

TECHNICAL DATA
TECHNISCHE DATEN
CARACTERISTIQUES TECHNIQUES
CARATTERISTICHE TECHNICHE

TYPE OF CONSTRUKTION: SPOOLVALVE
BAUART: SCHIEBERVENTIL
TYPE: ROBINET A BOISSEAU COULISSANT
TIPO: VALVOLA DI MANICOTTO

WORKING MEDIUM: MINERAL OIL, 10 UP TO 2000MM²/S
BETRIEBSMEDIUM: MINERALOEL, 2000 BIS 10 MM²/S
FLUIDE: HUILE MINERALE, 2000 A 10MM²/S
FLUIDO DI ESERCISIO:OLIO MINERALE,2000 A 10MM²/S

TEMPERATUR OF MEDIUM: -30 UP TO +80° C
+DRUCKMITTELTEMPERATUR:-30 BIS +80° C
TEMPERATURE DU FLUIDE: -30 A +80° C
TEMPERATURA DEL FLUIDO: -30 A +80° C

AMBIENT TEMPERATURE: -30 TO +80° C
UMGEBUNGSTEMPERATUR: -30 BIS +80° C
TEMPERATURE AMBIANT: -30 A +80°C
TEMPERATURA AMBIENTE: -30 A +80° C

INSTALLATION POSITION: OPTIONAL
EINBAULAGE: BELIEBIG
POSITION D' INSTALLATION: AU CHOIX
POSIZIONE DI MONTAGGIO: A PLACERE

WORKING PRESSURE: 150 BAR
BETRIEBSDRUCK: 150 BAR
PRESSION D' UTILISATION: 150 BAR
PRESSIONE DI ESERCIZIO: 150 BAR

PAINTING: BLACK SYNTHETIC RESIN VARNISH RAL9005
PORTS AND HOLES FREE OF PAINT
FARBANSTRICH: KUNSTHARZ-DECKLACK SCHWARZ RAL9005
ANCHLUESSE UND BOHRUNGEN FARBFREI
PEINTURE: VERNIS SYNTHETIQUE NOIR RAL 9005
ORIFICES ET TROUS SANS PEINTURE
VERNICATURA: VERNICE SINTETICA MERA RAL 9005
ORIFIZI ET FORI SENZA VERNICE

PRESSURE LIMITATION: 100$^{+10}_{0}$ BAR
DRUCKBEGRENZUNG: 100$^{+10}_{0}$ BAR
LIMITATION DE PRESSION: 100$^{+10}_{0}$ BAR
LIMITAZIONE DI PRESSIONE: 100$^{+10}_{0}$ BAR

PRESSURE AT THE RETURN PORT:
GEGENDRUCK AM RUECKLAUFANSCHLUSS: MAX. 5 bar
PRESSION AU ORIFICE DE RETOUR:
PRESSIONE A ORIFIZIO DI RETORNO:

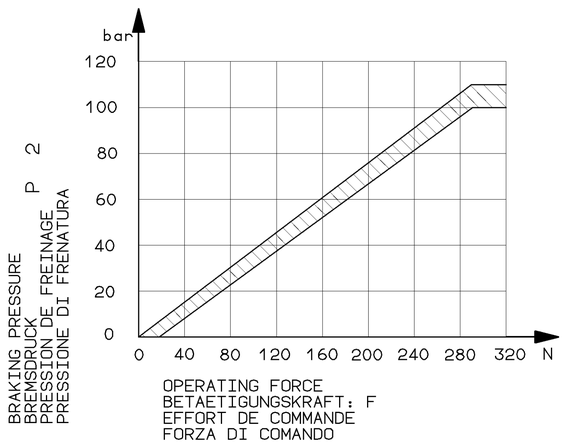

MARKING OF THE PORTS
KENNZEICHNUNG DER ANSCHLUESSE
DISTINCTIVE DES ORIFICES
DISTINTIVE DEGLI ORIFIZI

1.1 HYDRAULIC ACCUMULATOR
HYDRAULIKSPEICHER
ACCUMULATEUR DE PRESSION
ACCUMULATORE

2.1 SERVO BRAKE
BETRIEBSBREMSE
FREIN DE SERVICE
FRENO DI SERVIZIO

5.1 RETURN PORT
RUECKLAUFANSCHLUSS
ORIFICE DE RETOUR
ORIFIZIO DI RETORNO

2.4 TEST CONNECTION
PRUEFANSCHLUSS (M10×1)
RACCORD D' EPREUVE
RACCORDO DI PRAVA

TORQUE
ANZUGSMOMENT
COUPLE DE SERRAGE
COPPIA DE SERRAGGIO

M10×1 : 15^{+3}_{0} Nm
M16×1.5: $40^{\pm5}$ Nm

GENERAL SPECIFICATION: JED-334						
FURTHER TECHNICAL DATA:						
DOC. CODE:		SHEET:	TO			
GENERAL TOLERANCES						
CLASS 1)		RANGE OF NOMINAL DIMENSIONS (± mm) ≤50	> 50 ≤180	>180 ≤400	>400	
FINE		0,5	1,0	1,5	2,0	
MEDIUM	×	1,0	2,0	3,0	4,0	± 3°
COARSE		2,0	3,5	5,0	6,5	
TAPPED HOLES ACC. ISO 4039 / JED-162						
1) TOLERANCE CLASS APPLIED CROSSMARKED						

DCN-NO. REV. DATE

CADAM-DRAWING COPYRIGHT
DATE SIGNATURE
DRAWN: 96-01-08 KLIK
CHECKED:
STANDARDIZATION:

WABCO

BRAKE VALVE
BREMSVENTIL
ROBINET DE FREINAGE
DISTRIBUTORE DI COMANDO

MASS	SCALE	PRODUCT IDENTIFICATION NO.	DOC. CODE	SHEET
3.4 KG	1:1	467 406 117 0	605	1/1
SIZE A 1	T.R.I. 141		SHAPE CODE	REPLACEMENT FOR

100mm

EXPERT CODE 7 1 0

PRODUCT TYPE 0 2 X

TOUTE COMMUNICATION OU REPRODUCTION DE CE DOCUMENT, TOUTE EXPLOITATION OU COMMUNICATION DE SON CONTENU OU DE PARTIES DE CELUI-CI SONT INTERDITES, SAUF AUTORISATION ECRITE. DANS LE CAS D'ENREGISTREMENT DE BREVET, DE MODELE D'UTILITE, DE DESSIN OU MODELE, WABCO SE RESERVE LE DROIT DE DEPOSER UNE DEMANDE DE BREVET D'INVENTION OU DE MODELE D'UTILITE.
NON È PERMESSO DIRAMARE A TERZI O RIPRODURRE QUESTO DOCUMENTO, NE UTILIZZARE IL CONTENUTO O RENDERNE PARTE ALTRUI, SALVO AUTORIZZAZIONE SCRITTA. NEL CASO DI REGISTRAZIONE DI BREVETTO, DI MODELLO DI UTILITÀ, DI DISEGNO O MODELLO, WABCO SI RIPRESERVA IL DIRITTO DI DEPOSITARE UNA DOMANDA DI BREVETTO DI MODELLO DI UTILITÀ.
BEFOREN IST DIESES DOKUMENT UND DAS DARIN ENTHALTENE WISSEN DRITTEN WEDER ZUGANGLICH ZU MACHEN NOCH DAVON GEBRAUCH ZU MACHEN OHNE SCHRIFTLICHE ERLAUBNIS. FÜR DEN FALL DER EINTRAGUNG VON PATENT, GEBRAUCHSMUSTER, ZEICHNUNG OD. MUSTER BEHÄLT WABCO SICH DAS RECHT VOR, PATENTANMELDUNG ZU MACHEN.
NO PART OF THIS DOCUMENT AND GIVING IT TO OTHERS AND THE USE OF COMMUNICATION OF THE CONTENTS THEREOF ARE PROHIBITED WITHOUT AUTHORIZATION. IN THE EVENT OF REGISTRATION OF A PATENT, UTILITY MODEL OR DESIGN, WABCO RESERVES THE RIGHT TO FILE A PATENT APPLICATION.
THIS DOCUMENT IS THE SUBJECT OF COPYRIGHT.

1800/016/07/04.92
606/1003