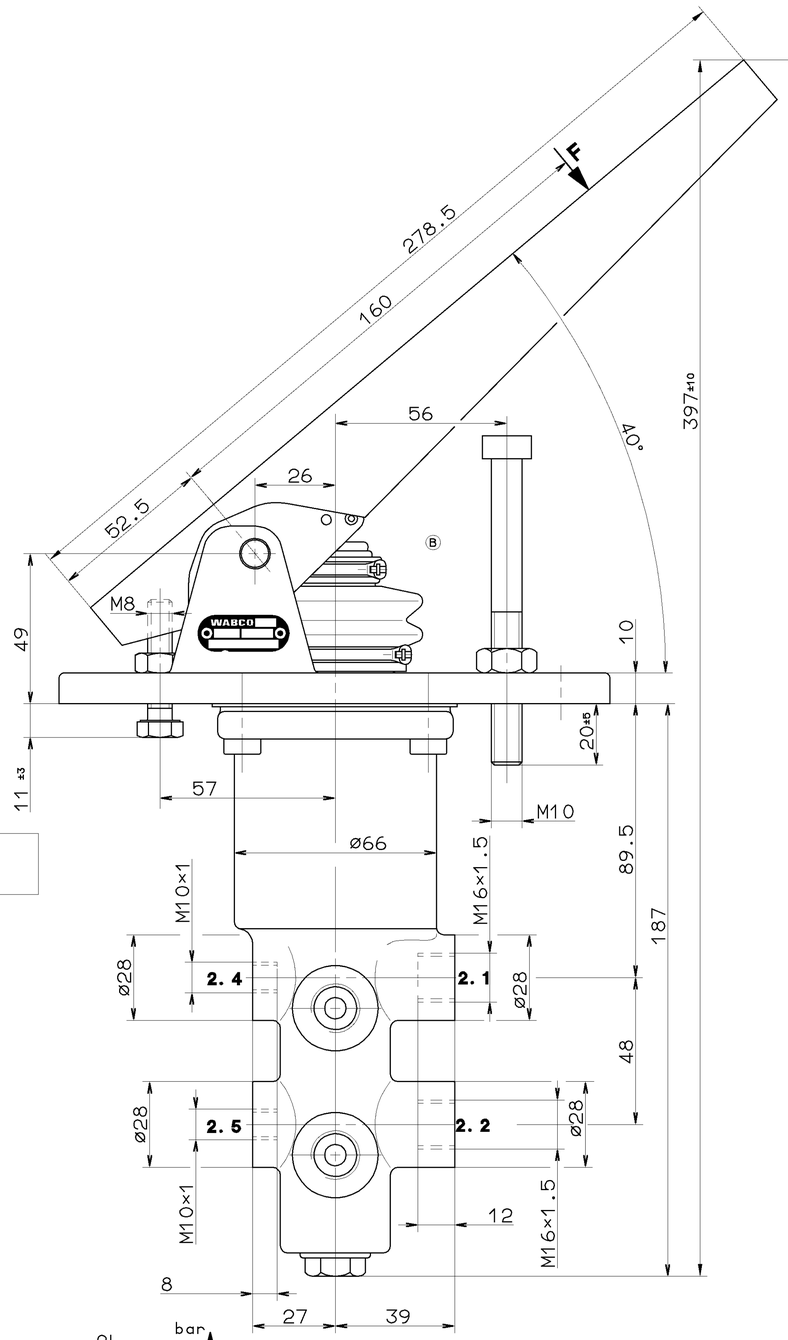

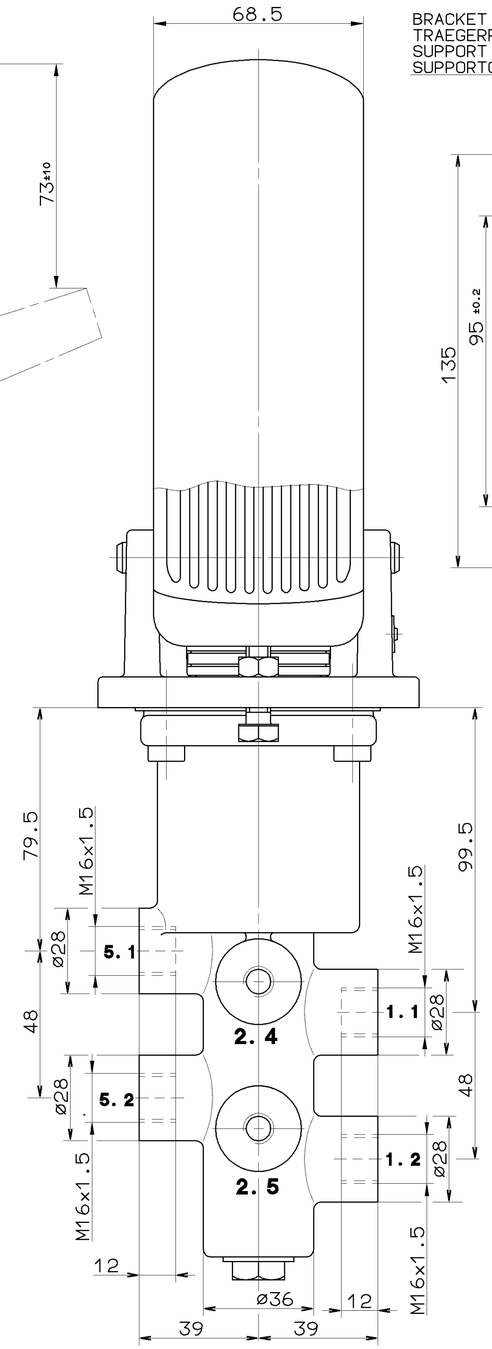

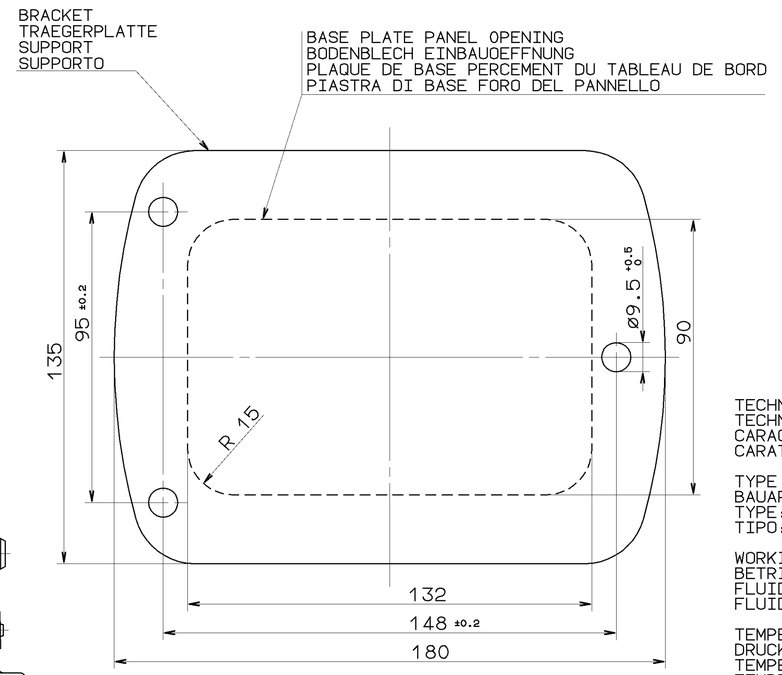

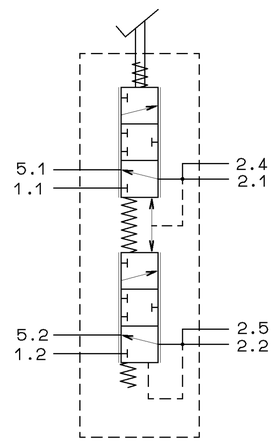

TORQUE
ANZUGSMOMENT
COUPLE DE SERRAGE
COPPIA DE SERRAGGIO

M10x1: 15^{+3}_{0} Nm
M16x1.5: $40^{\pm5}$ Nm

TECHNICAL DATA
TECHNISCHE DATEN
CARACTERISTIQUES TECHNIQUES
CARATTERISTICHE TECHNICHE

TYPE OF CONSTRUKTION: SPOOLVALVE
BAUART: SCHIEBERVENTIL
TYPE: ROBINET A BOISSEAU COULISSANT
TIPO: VALVOLA DI MANICOTTO

WORKING MEDIUM: MINERAL OIL, 10 UP TO 2000MM²/S
BETRIEBSMEDIUM: MINERALOEL, 2000 BIS 10 MM²/S
FLUIDE: HUILE MINERALE, 2000 A 10MM²/S
FLUIDO DI ESERCISIO:OLIO MINERALE,2000 A 10MM²/S

TEMPERATUR OF MEDIUM:
DRUCKMITTELTEMPERATUR: -30° BIS 80°C
TEMPERATURE DU FLUIDE:
TEMPERATURA DEL FLUIDO:

AMBIENT TEMPERATURE:
UMGEBUNGSTEMPERATUR: -30° BIS 80°C
TEMPERATURE AMBIANT:
TEMPERATURA AMBIENTE:

INSTALLATION POSITION: OPTIONAL
EINBAULAGE: BELIEBIG
POSITION D' INSTALLATION: AU CHOIX
POSIZIONE DI MONTAGGIO: A PLACERE

WORKING PRESSURE:
BETRIEBSDRUCK: 150 BAR
PRESSION D' UTILISATION:
PRESSIONE DI ESERCIZIO:

PAINTING: BLACK SYNTHETIC RESIN VARNISH RAL9005
PORTS AND HOLES FREE OF PAINT
FARBANSTRICH: KUNSTHARZ-DECKLACK SCHWARZ RAL9005
ANCHLUESSE UND BOHRUNGEN FARBFREI
PEINTURE: VERNIS SYNTHETIQUE NOIR RAL 9005
ORIFICES ET TROUS SANS PEINTURE
VERNICATURA: VERNICE SINTETICA MERA RAL 9005
ORIFIZI ET FORI SENZA VERNICE

PRESSURE LIMITATION:
DRUCKBEGRENZUNG: 72^{+10}_{0} BAR
LIMITATION DE PRESSION:
LIMITAZIONE DI PRESSIONE:

PRESSURE AT THE RETURN PORT:
GEGENDRUCK AM RUECKLAUFANSCHLUSS: MAX. 5 bar
PRESSION AU ORIFICE DE RETOUR:
PRESSIONE A ORIFIZIO DI RETORNO:

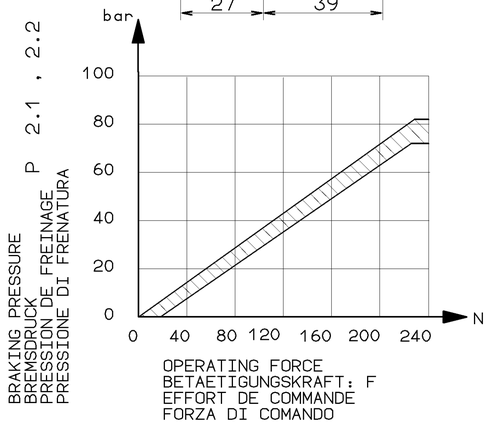

MARKING OF THE PORTS
KENNZEICHNUNG DER ANSCHLUESSE
DISTINCTIVE DES ORIFICES
DISTINTIVE DEGLI ORIFIZI

1.1 HYDRAULIC ACCUMULATOR (CIRCUIT 1)
HYDRAULIKSPEICHER (KREIS 1)
ACCUMULATEUR DE PRESSION (CIRCUIT 1)
ACCUMULATORE (CIRCUITO 1)

1.2 HYDRAULIC ACCUMULATOR (CIRCUIT 2)
HYDRAULIKSPEICHER (KREIS 2)
ACCUMULATEUR DE PRESSION (CIRCUIT 2)
ACCUMULATORE (CIRCUITO 2)

2.1 SERVO BRAKE (CIRCUIT 1)
BETRIEBSBREMSE (KREIS 1)
FREIN DE SERVICE (CIRCUIT 1)
FRENO DI SERVIZIO (CIRCUITO 1)

2.2 SERVO BRAKE (CIRCUIT 2)
BETRIEBSBREMSE (KREIS 2)
FREIN DE SERVICE (CIRCUIT 2)
FRENO DI SERVIZIO (CIRCUITO 2)

5.1 RETURN PORT (CIRUIT 1)
RUECKLAUFANSCHLUSS (KREIS 1)
ORIFICE DE RETOUR (CIRCUIT 1)
ORIFIZIO DI RETORNO (CIRCUITO 1)

5.2 RETURN PORT (CIRUIT 2)
RUECKLAUFANSCHLUSS (KREIS 2)
ORIFICE DE RETOUR (CIRCUIT 2)
ORIFIZIO DI RETORNO (CIRCUITO 2)

2.4 TEST CONNECTION (CIRCUIT1)
PRUEFANSCHLUSS (KREIS 1)
RACCORD D' EPREUVE (CIRCUIT 1)
RACCORDO DI PRAVA (CIRCUITO 1)

2.5 TEST CONNECTION (CIRCUIT1)
PRUEFANSCHLUSS (KREIS 1)
RACCORD D' EPREUVE (CIRCUIT 1)
RACCORDO DI PRAVA (CIRCUITO 1)

GENERAL SPECIFICATION: JED-334						
FURTHER TECHNICAL DATA:						
DOC. CODE:	SHEET:	TO				
GENERAL TOLERANCES						
CLASS 1)	RANGE OF NOMINAL DIMENSIONS (± mm) ≤50	>50 ≤180	>180 ≤400	>400		
FINE	0,5	1,0	1,5	2,0		
MEDIUM ×	1,0	2,0	3,0	4,0	± 3°	
COARSE	2,0	3,5	5,0	6,5		
TAPPED HOLES ACC. ISO 4039 / JED-152					53889	1■B 94-05-05
					050217	4■A 92-02-24
1) TOLERANCE CLASS APPLIED CROSSMARKED					DCN-NO.	REV. DATE

CADAM-DRAWING COPYRIGHT		WABCO	
DATE	SIGNATURE		
DRAWN: 90-04-25 BREIDEL		BRAKE VALVE BREMSVENTIL ROBINET DE FREINAGE DISTRIBUTORE DI COMANDO	
CHECKED: 90-04-25 ALTMEPPEN			
STANDARDIZATION: 90-04-25 PANTZER			
MASS 4.2 KG	SCALE 1:1	PRODUCT IDENTIFICATION NO. 467 406 220 0	DOC. CODE 605 / SHEET 1/1
SIZE A 1	T.R.I. 141		
		SHAPE CODE	REPLACEMENT FOR
100mm		EXPERT CODE 7 0 7	PRODUCT TYPE 0 2 X

TOUTE COMMUNICATION OU REPRODUCTION DE CE DOCUMENT, TOUTE EXPLOITATION OU COMMUNICATION DE SON CONTENU N'EST PERMISE QU'AVEC L'AUTORISATION ECRITE DE WABCO. TOUS DROITS RESERVES EN FAVEUR DE WABCO EN CAS DE DEPOT DE BREVET, DE MODELE D'UTILITE OU DE DESSIN.
NON È PERMESSO CONSEGNARE A TERZI O RIPRODURRE QUESTO DOCUMENTO, NE UTILIZZARE IL CONTENUTO O RISERVARLO ALL'ATTENZIONE DI TERZI. TUTTI I DIRITTI SONO RISERVATI A WABCO IN CASO DI DEPOSITO DI BREVETTO, MODELLO DI UTILITÀ O DISEGNO.
NOTE: THIS DOCUMENT AND GIVING IT TO OTHERS AND THE USE OR COMMUNICATION OF THE CONTENTS THEREOF, IS NOT PERMITTED WITHOUT WABCO'S WRITTEN AUTHORISATION. ALL RIGHTS ARE RESERVED IN THE EVENT OF A PATENT, UTILITY MODEL OR DESIGN.
THIS DOCUMENT IS THE SUBJECT OF COPYRIGHT