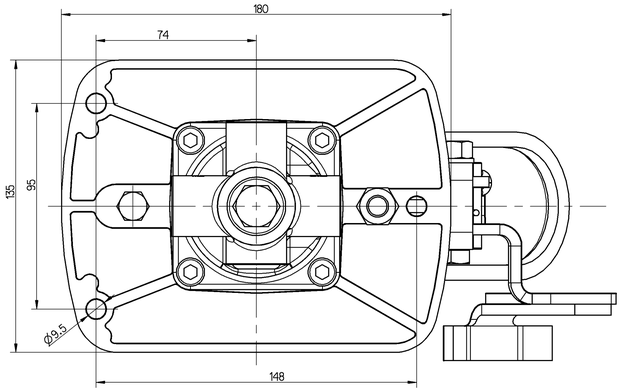

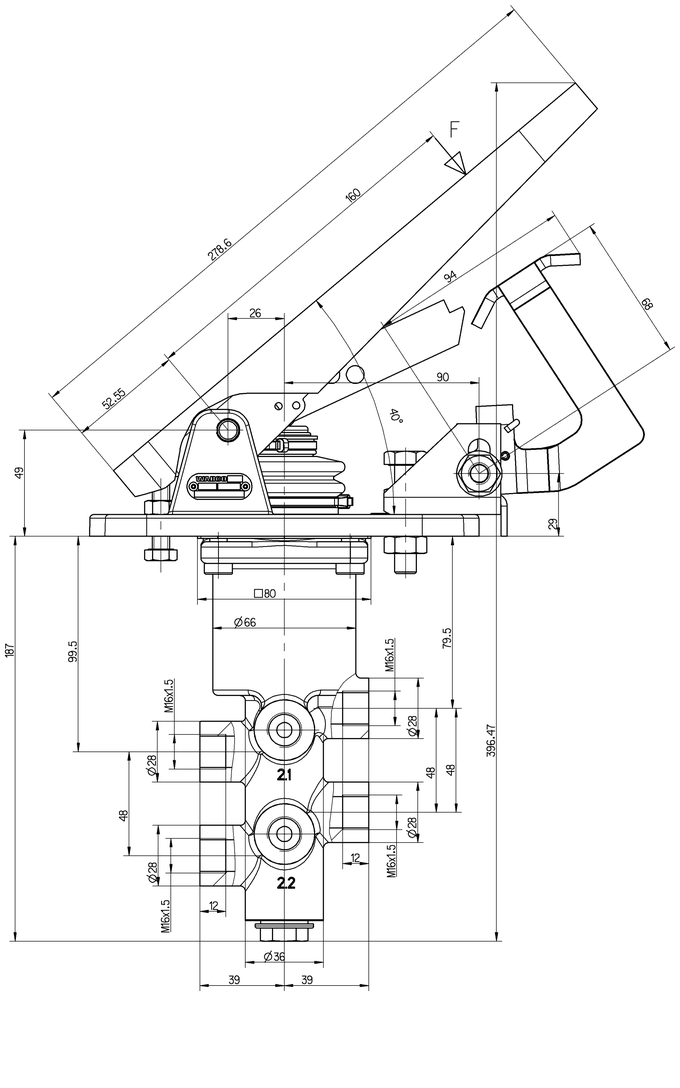

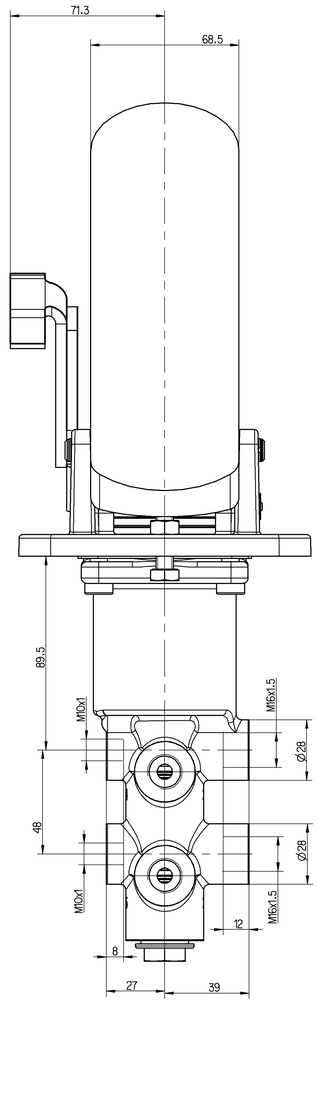

TECHNICAL DATA
TECHNISCHE DATEN
CARACTERISTIQUES TECHNIQUES
CARATTERISTICHE TECNICHE

WORKING MEDIUM : MINERAL OIL
BETRIEBSMEDIUM : MINERALOEL 10...2000 mm^2/s
FLUIDE D'UTILISATION: HUILE MINERALE
FLUIDO DI ESERCIZIO : OLIO MINERALE

FLUID TEMPERATURE :
DRUCKMITTELTEMPERATUR : -30°C...+80°C
TEMPERATURE DU FLUIDE :
TEMPERATURA A MEDIA PRESSIONE:

AMBIENT TEMPERATURE :
UMGEBUNGSTEMPERATUR : -30°C...+80°C
TEMPERATURE AMBIANTE:
TEMPERATURA AMBIENTE:

INSTALLATION POSITION : OPTIONAL
EINBAULAGE : BELIEBIG
POSITION D' INSTALLATION : A VOLONTE
POSIZIONE DI MONTAGGIO : A SCELTA

WORKING PRESSURE :
BETRIEBSDRUCK : 150 bar
PRESSION D'UTILISATION:
PRESSIONE DI ESERCIZIO:

PAINTING : BLACK SYNTHETIC RESIN VARNISH RAL 9005
FARBANSTRICH: PORTS AND HOLES FREE OF PAINT
PEINTURE : KUNSTHARZDECKLACK SCHWART RAL 9005
VERNICIATURA: ANSCHLÜSSE UND BOHRUNGEN FARBFREI
VERNIS SYNTHETIQUE NOIR RAL 9005
ORIFICES ET TROUS SANS PEINTURE
VERNICE SINTETICA MERA RAL 9005
ORIFIZI ET FORI SENZA VERNICE

PRESSURE LIMITING
DRUCKBEGRENZUNG 70+10 bar
LIMITATION DE PRESSION
LIMITAZIONE DI PRESSIONE

PRESSURE AT THE RETURN PORT:
GEGENDRUCK AM RÜCKLAUFANSCHLUß: max. 5 bar
PRESSION AU ORIFICE DER RETOUR:
PRESSIONE A ORIFIZIO DI RETORNO:

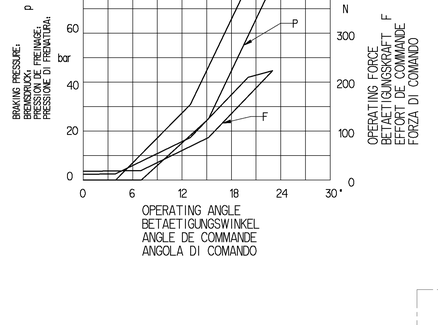

PORT IDENTIFICATION
ANSCHLUSSBEZEICHNUNG
REFERENCE D' ORIFICE
DESIGNAZIONE DELL 'ORIFIZIO

1.1 ACCUMULATOR (CIRCUIT 1)
DRUCKSPEICHER (KREIS 1)
ACCUMULATEUR (CIRCUIT 1)
ACCUMULATORE (CIRCUITO 1)

1.2 ACCUMULATOR (CIRCUIT 2)
DRUCKSPEICHER (KREIS 2)
ACCUMULATEUR (CIRCUIT 2)
ACCUMULATORE (CIRCUITO 2)

2.1 SERVICE BRAKING SYSTEM (CIRCUIT 1)
BETRIEBSBREMSANLAGE (KREIS 1)
DISPOSITIF DE FREINAGE DE SERVICE (CIRCUIT 1)
DISPOSITIVO DI FRENATURA DI SERVIZIO (CIRCUITO 1)

2.2 SERVICE BRAKING SYSTEM (CIRCUIT 2)
BETRIEBSBREMSANLAGE (KREIS 2)
DISPOSITIF DE FREINAGE DE SERVICE (CIRCUIT 2)
DISPOSITIVO DI FRENATURA DI SERVIZIO (CIRCUITO 2)

5.1 RETURN PORT (CIRCUIT 1)
RÜCKLAUFANSCHLUß (KREIS 1)
ORIFICE DE RETOUR (CIRCUIT 1)
ORIFIZIO DI RETORNO (CIRCUITO 1)

5.2 RETURN PORT (CIRCUIT 2)
RÜCKLAUFANSCHLUß (KREIS 2)
ORIFICE DE RETOUR (CIRCUIT 2)
ORIFIZIO DI RETORNO CIRCUITO 2)

2.4 TEST CONNECTIO (CIRCUIT 1)
PRÜFANSCHLUß (KREIS 1)
RACCORD D' EPREUVE (CIRCUIT 1)
RACCORDO DI PRAVA (CIRCUITO 1)

2.5 TEST CONNECTIO (CIRCUIT 2)
PRÜFANSCHLUß (KREIS 2)
RACCORD D' EPREUVE (CIRCUIT 2)
RACCORDO DI PRAVA (CIRCUITO 2)

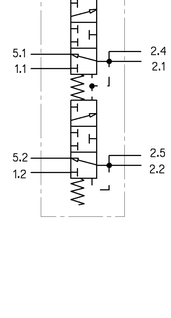

TORQUE : M16x1.5: 40±5Nm
ANZUGSMOMENT : M10x1: 15±3Nm
COUPLE DE SERRAGE :
COPPIA DI SERRAGGIO:

GENERAL SPECIFICATION: JED-334.0							
FURTHER TECHNICAL DATA:							
DOC. CODE:				SHEET:		TO	
GENERAL TOLERANCES							
		RANGE OF NOMINAL DIMENSIONS (± mm)					
CLASS	1)	> 6 ≤ 50	> 50 ≤ 180	> 180 ≤ 400	> 400		
FINE		0.5	1.0	1.5	2.0		
MEDIUM	X	1.0	2.0	3.0	4.0	±1°	
COARSE		2.0	3.0	5.0	8.5		
TAPPED HOLES ACC. ISO 4229 / JED-152							
1) TOLERANCE CLASS APPLIED CROSSMARKED							

Pro/ENGINEER DRAWING COPYRIGHT			
DATE	SIGNATURE		
00-01-10	DRAWN Heinrich		
	CHECKED		
EXPERT CODE 7 0 7			
MASS 4.4 kg	SCALE		
SIZE A 0	TRI 141		

WABCO

BRAKE VALVE
BREMSVENTIL
ROBINET DE FREIN
DISTRIBUTORE FRENO

PRODUCT IDENTIFICATION NO.	DOC. CODE	SHEET
467 406 242 0	605	1/1

FUNCTION CODE	SHAPE CODE	PRODUCT TYPE	REPLACEMENT FOR
		0 2	

DCN-NO.	REV.	DATE

Dra: 467406242O...605
Wel: 467406242O...605
ATZ 8.2