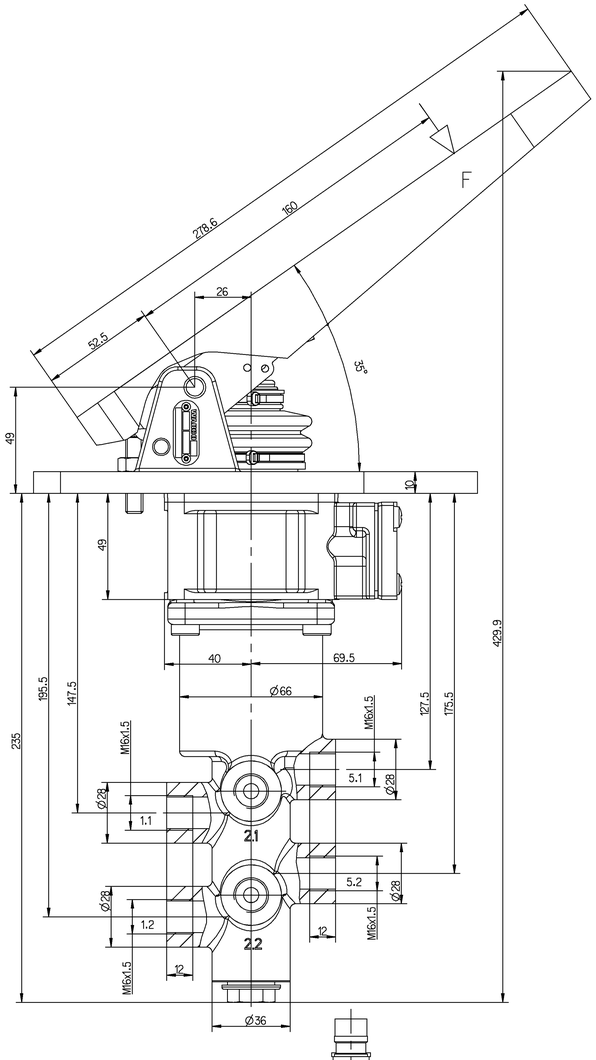

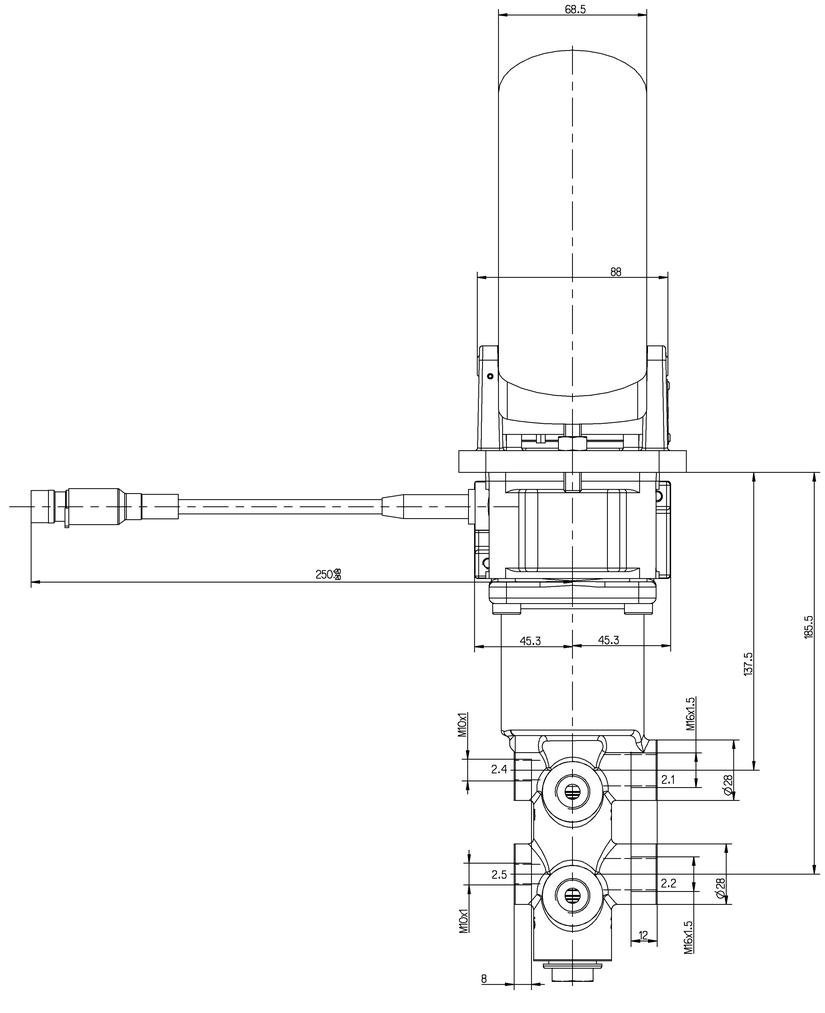

TECHNICAL DATA
TECHNISCHE DATEN
CARACTERISTIQUES TECHNIQUES
CARATTERISTICHE TECNICHE

WORKING MEDIUM : MINERAL OIL
BETRIEBSMEDIUM : MINERALOEL 10...2000 mm^2/s
FLUIDE D'UTILISATION: HUILE MINERALE
FLUIDO DI ESERCIZIO : OLIO MINERALE

FLUID TEMPERATURE :
DRUCKMITTELTEMPERATUR : -30°C...+80°C
TEMPERATURE DU FLUIDE :
TEMPERATURA A MEDIA PRESSIONE:

AMBIENT TEMPERATURE :
UMGEBUNGSTEMPERATUR : -30°C...+80°C
TEMPERATURE AMBIANTE:
TEMPERATURA AMBIENTE:

INSTALLATION POSITION : OPTIONAL
EINBAULAGE : BELIEBIG
POSITION D' INSTALLATION : A VOLONTE
POSIZIONE DI MONTAGGIO : A SCELTA

WORKING PRESSURE :
BETRIEBSDRUCK : 150 bar
PRESSION D'UTILISATION:
PRESSIONE DI ESERCIZIO:

PAINTING : BLACK SYNTHETIC RESIN VARNISH RAL 9005
FARBANSTRICH: PORTS AND HOLES FREE OF PAINT
PEINTURE : KUNSTHARZDECKLACK SCHWART RAL 9005
VERNICIATURA: ANSCHLÜSSE UND BOHRUNGEN FARBFREI
VERNIS SYNTHETIQUE NOIR RAL 9005
ORIFICES ET TROUS SANS PEINTURE
VERNICE SINTETICA MERA RAL 9005
ORIFIZI ET FORI SENZA VERNICE

PRESSURE AT THE RETURN PORT:
GEGENDRUCK AM RÜCKLAUFANSCHLUß: max. 5 bar
PRESSION AU ORIFICE DER RETOUR:
PRESSIONE A ORIFIZIO DI RETORNO:

ELECTRICAL PART:
ELEKTRISCHER TEIL:
PARTIE ELECTRIQUE:
PARTE ELETTRICA:

DEGREE OF PROTECTION
SCHUTZART DIN 40050, IP 66A
DEGRE DE PROTECTION
GRADO DI PROTEZIONE

LOAD - CARRYING CPACITY
BELASTBARKEIT 24 V, 0.4 A
CAPACITE DE CHARGE
CAPACITÀ DI CARICO

MATING PART PLUG
GEGENSTÜCK STECKER ITT - CANNON NR.: 120-1806-000
PENDANT FICHE
ACCOPIAMENTO SPINA

PORT IDENTIFICATION
ANSCHLUSSBEZEICHNUNG
REFERENCE D' ORIFICE
DESIGNAZIONE DELL 'ORIFIZIO

1.1 ACCUMULATOR (CIRCUIT 1)
DRUCKSPEICHER (KREIS 1)
ACCUMULATEUR (CIRCUIT 1)
ACCUMULATORE (CIRCUITO 1)

1.2 ACCUMULATOR (CIRCUIT 2)
DRUCKSPEICHER (KREIS 2)
ACCUMULATEUR (CIRCUIT 2)
ACCUMULATORE (CIRCUITO 2)

2.1 SERVICE BRAKING SYSTEM (CIRCUIT 1)
BETRIEBSBREMSANLAGE (KREIS 1)
DISPOSITIF DE FREINAGE DE SERVICE (CIRCUIT 1)
DISPOSITIVO DI FRENATURA DI SERVIZIO (CIRCUITO 1)

2.2 SERVICE BRAKING SYSTEM (CIRCUIT 2)
BETRIEBSBREMSANLAGE (KREIS 2)
DISPOSITIF DE FREINAGE DE SERVICE (CIRCUIT 2)
DISPOSITIVO DI FRENATURA DI SERVIZIO (CIRCUITO 2)

5.1 RETURN PORT (CIRCUIT 1)
RÜCKLAUFANSCHLUß (KREIS 1)
ORIFICE DE RETOUR (CIRCUIT 1)
ORIFIZIO DI RETORNO (CIRCUITO 1)

5.2 RETURN PORT (CIRCUIT 2)
RÜCKLAUFANSCHLUß (KREIS 2)
ORIFICE DE RETOUR (CIRCUIT 2)
ORIFIZIO DI RETORNO (CIRCUITO 2)

2.4 TEST CONNECTIO (CIRCUIT 1)
PRÜFANSCHLUß (KREIS 1)
RACCORD D' EPREUVE (CIRCUIT 1)
RACCORDO DI PRAVA (CIRCUITO 1)

2.5 TEST CONNECTIO (CIRCUIT 2)
PRÜFANSCHLUß (KREIS 2)
RACCORD D' EPREUVE (CIRCUIT 2)
RACCORDO DI PRAVA (CIRCUITO 2)

TORQUE : M16x1.5: 40±5Nm
ANZUGSMOMENT : M10x1: 15+3Nm
COUPLE DE SERRAGE :
COPPIA DI SERRAGGIO:

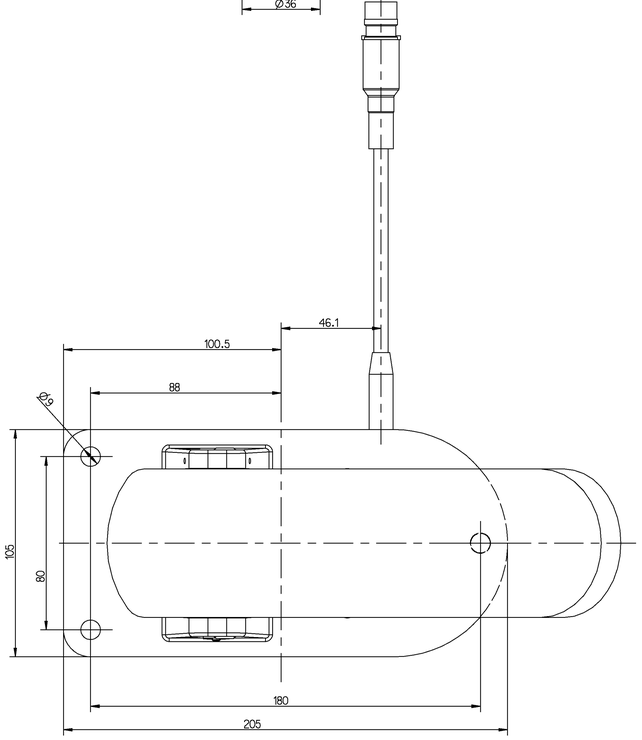

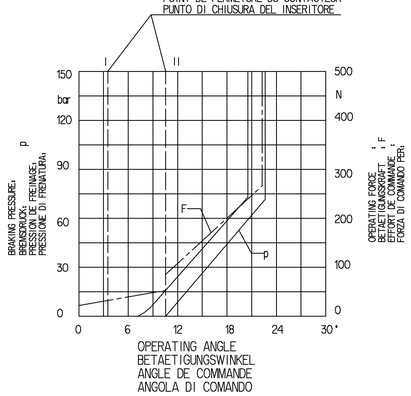

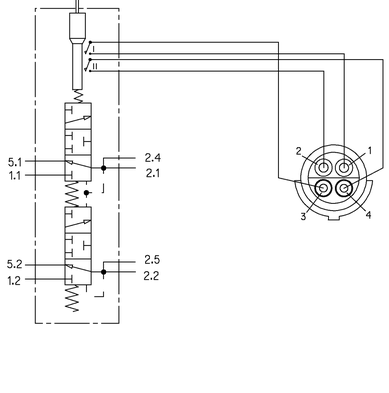

GENERAL SPECIFICATION: JED-334.0												Pro/ENGINEER DRAWING COPYRIGHT				WABCO	
FURTHER TECHNICAL DATA:												DATE	SIGNATURE				
DOC. CODE:				SHEET:		TO						97-09-01	Heinrich	DRAWN		BRAKE VALVE	
GENERAL TOLERANCES												97-09-01	Heinrich	CHECKED		BREMSVENTIL	
	RANGE OF NOMINAL DIMENSIONS (± mm)											EXPERT CODE				ROBINET DE FREINAGE	
CLASS 1)	≤ 50	> 50 ≤ 180	> 180 ≤ 400	> 400								7 0 7				DISTRIBUTORE DI COMANDO	
FINE		0.5	1.0	1.5	2.0							MASS	SCALE	PRODUCT IDENTIFICATION NO.			
MEDIUM	X	1.0	2.0	3.0	4.0	±1°						5.3 X6	1:1	467 406 509 0		DOC. CODE	SHEET
COARSE		2.0	3.5	5.0	6.5							SIZE	TRI			605	1/1
TAPPED HOLES ACC. ISO 4029 / JED-152												A 0	141	FUNCTION CODE	SHAPE CODE	PRODUCT TYPE	REPLACEMENT FOR
1) TOLERANCE CLASS APPLIED CROSSMARKED																0 2	884 010 071 0
												DCN-NO.	REV.	DATE			

DIN A4 DRAWING WITHOUT TITLE, SHALL BEAR THE WABCO COPYRIGHT NOTICE. THIS DRAWING MAY NOT BE REPRODUCED OR MADE AVAILABLE TO THIRD PARTIES WITHOUT WABCO'S PRIOR WRITTEN CONSENT. ALL RIGHTS OF WABCO'S INTELLECTUAL PROPERTY RIGHTS, INCLUDING PATENT, UTILITY MODEL, DESIGN AND COPYRIGHT, ARE RESERVED FOR WABCO.

DIN A4 DRAWING WITHOUT TITLE, SHALL BEAR THE WABCO COPYRIGHT NOTICE. THIS DRAWING MAY NOT BE REPRODUCED OR MADE AVAILABLE TO THIRD PARTIES WITHOUT WABCO'S PRIOR WRITTEN CONSENT. ALL RIGHTS OF WABCO'S INTELLECTUAL PROPERTY RIGHTS, INCLUDING PATENT, UTILITY MODEL, DESIGN AND COPYRIGHT, ARE RESERVED FOR WABCO.

DWG.: 4174069891_605 JOB: 6.3 TMI: 4174069891_JOB 6.3