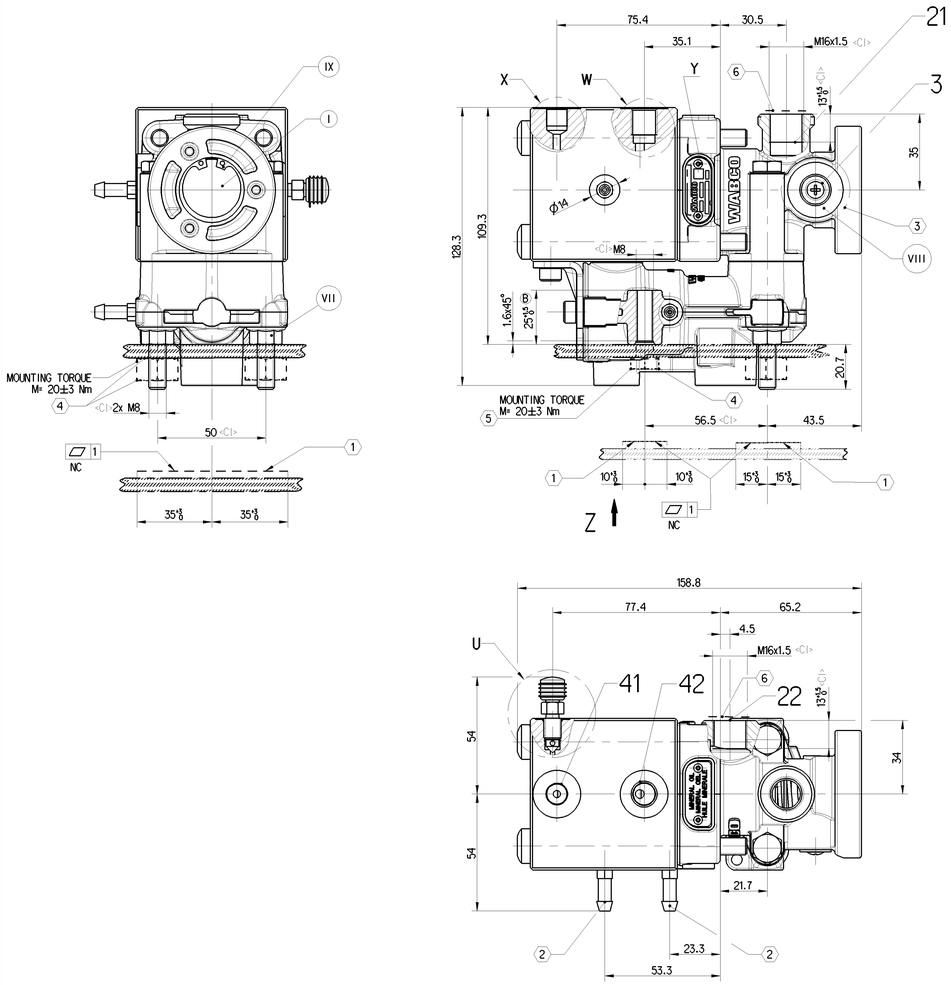

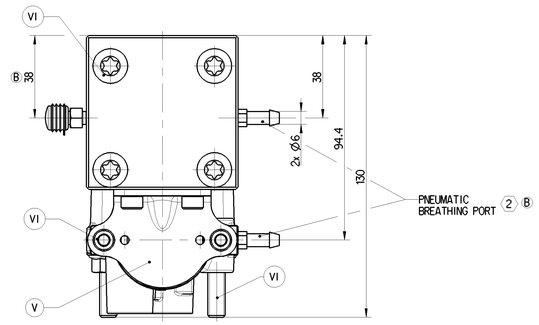

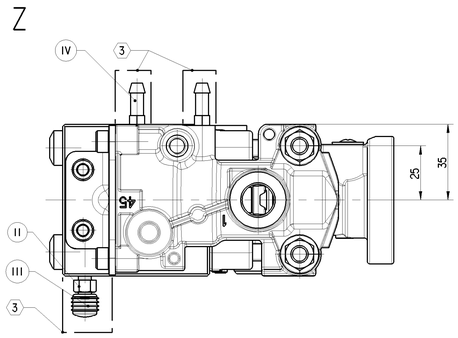

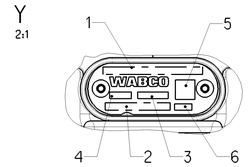

(1) –
(2) WABCO-DEVICE NUMBER
(3) SERIAL NUMBER
(4) DATE OF MANUFACTURE
(5) DMC CODE
(6) PRI CODE

PORT	DESIGNATION	MEDIUM	THREAD	TYPE	TORQUE
1	Supply Port	Compressed Air	M16x1.5	ISO 9974	MAX.34 Nm
21	Delivery Port	Compressed Air	M16x1.5	ISO 9974	MAX.34 Nm
22	Delivery Port	Compressed Air	M16x1.5	ISO 9974	MAX.34 Nm
41	Control Port	Mineral Oil	M10x1	ISO 9974	MAX.13 Nm
42	Control Port	Compressed Air	M12x1.5	ISO 9974	MAX.21 Nm
3	Exhaust	-	-	-	-

MEDIUM PNEUMATIC PART:	AIR
WORKING PRESSURE:	$p_{1/42}$ max. = 8.5 bar
TEMPORARILY:	$p_{1/42}$ max. = 10 bar
MEDIUM HYDRAULIC PART:	MINERAL OIL
WORKING PRESSURE:	p_{41} max. = 50 bar
TEMPORARILY:	p_{41} max. = 120 bar
HYDRAULIC WORKING VOLUME:	P41 ≤ 2.0 cm^3
RESIDUAL PRESSURE IN THE HYDRAULIC SYSTEM:	p_{41} ≤ 0.1 bar
THERMAL RANGE:	-40°C...+80°C
TEMPORARILY:	UNPRESSURIZED : 1h +110°C

(1) CUSTOMER CONTACT SURFACE
(2) MIN. LENGHT OF HOSE : 200 mm
(3) COVER WHEN PAINTING ON THE VEHICLE
(4) CUSTOMER PART
(5) MINIMUM THREAD ENGAGEMENT 2 X d
(6) PROTECTING PLUG

PART CODE	MATERIAL	SURFACE PROTECTION
I	ALUMINIUM ALLOY	PASSIVATION WITH CHROMIUM
II	FREE CUTTING STEEL	ZINC ALLOY COATING WITH PASSIVATION
III	ISOPRENE NATURAL RUBBER	-
IV	FREE CUTTING STEEL	PASSIVATION FOR ZINC ALLOY STEEL
V	PLAIN STEEL	PASSIVATION FOR ZINC ALLOY STEEL
VI	BOLT CLASS 8.8	ZINC-NICKEL COATING WITH PASSIVATION
VII	NUT CLASS 8	ZINC ALLOY COATING WITH PASSIVATION
VIII	NBR	-
IX	STEEL STRIP FOR SPRINGS	MECHANICAL ZINC COATING

Nominal Diameters

Breakaway module status	From Port	To Port	Nominal diameter
Open	P1	P21/22	Ø6mm
Closed	P1	P21	Ø1.5mm
n/a	P22	P3	Ø10mm

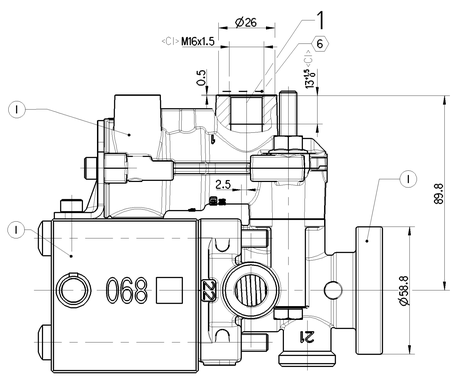

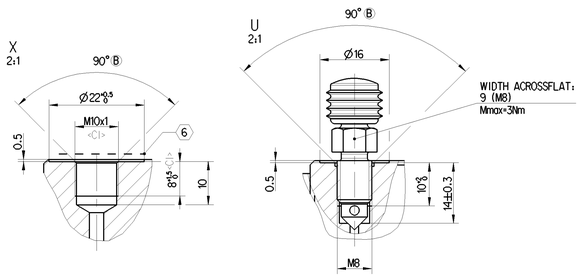

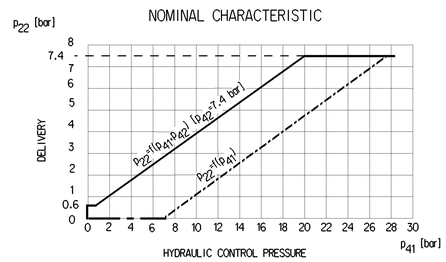

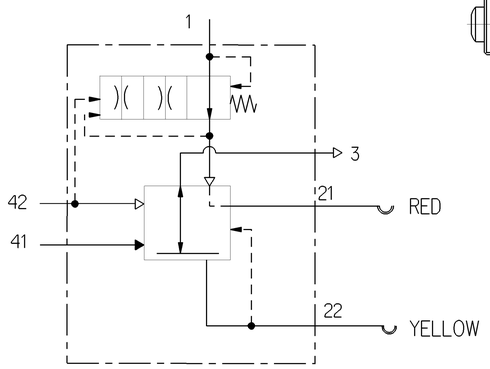

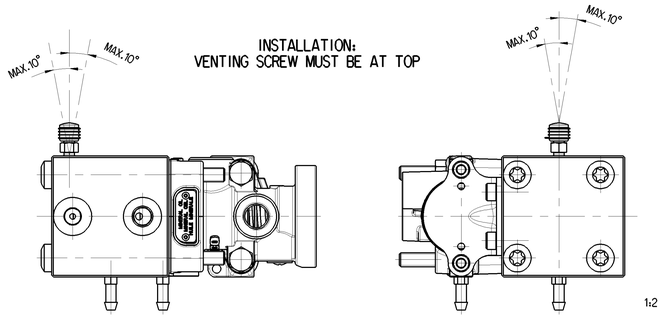

INSTALLATION:
VENTING SCREW MUST BE AT TOP

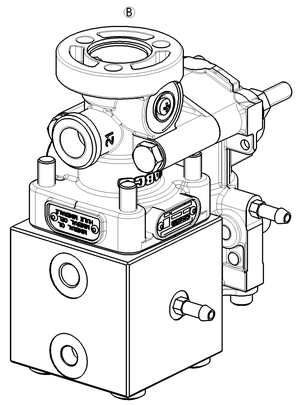

General Specification: JED-3341-1 , Size ISO 14405 LP					
Further Technical Data: 470 015 047 0					
Doc. Code: 035	Sheet:	To			
General Tolerances JED-261					
Range of Nominal Dimensions (± mm)					
Class 1)	≥ 50	> 50 ≥ 180	> 180 ≥ 400	> 400	
Fine	0.5	1.0	1.5	2.0	±5°
Medium X	1.0	2.0	3.0	4.0	
Coarse	2.0	3.5	5.0	6.5	
Tapped Holes acc.					
1) Tolerance Class Applied Crosshatched					

Copyright WABCO®

Date	Signature
Drawn 2021-11-03	Jakubowska
Checked 2021-11-15	Jakubowska
Expert Jakubowska	

WABCO

TRAILER CONTROL VALVE

Mass	Scale	Material No.	Date of first issue	
1.967 kg	1:1 (2:1/1:2)	470 015 047 0	2017-12-07	
Doc.Code	Language	Sheet		
005	EN	1/1		
Size	Ind. Index	ECN No.	Revision	Techn. Resp.
A 0	CREO	501868	9x B	5830
Replacement for				
-				

Tale dokumentacja stanowiąca się na dokumenty, które wszystkie są odpowiedzialne za ich zmiany oraz identyfikacja, oraz powiadomienie wszystkich osób mogących ucierpieć z powodu ich wydania w wymiarze do szkody w wymiarze do szkody. Nie dopuszcza się ujawniania osobom trzecim bez uprzedniego pisemnego zezwolenia firmy WABCO.
This document is the property of WABCO. Such recipients as are entrusted with its contents are responsible for its modification and identification, and for notifying all persons who may be injured by its issuance in proportion to the damage done. It is not to be disclosed to third persons without prior written consent of WABCO.
Tego dokumentu nie wolno ujawniać osobom trzecim bez uzyskania pisemnej zgody firmy WABCO.
Questo documento è proprietà della WABCO. Le persone che ne sono in possesso sono responsabili della sua modifica e identificazione, e della notifica a tutte le persone che possono essere danneggiate a seguito della sua emissione, in proporzione al danno causato. Non deve essere rivelato a terzi senza il consenso scritto della WABCO.
Ten dokument jest własnością firmy WABCO. Osoby, które posiadają jego treść są odpowiedzialne za jego modyfikację i identyfikację oraz powiadomienie wszystkich osób, które mogą ucierpieć z powodu jego wydania w wymiarze do szkody. Nie dopuszcza się ujawniania osobom trzecim bez uprzedniego pisemnego zezwolenia firmy WABCO.