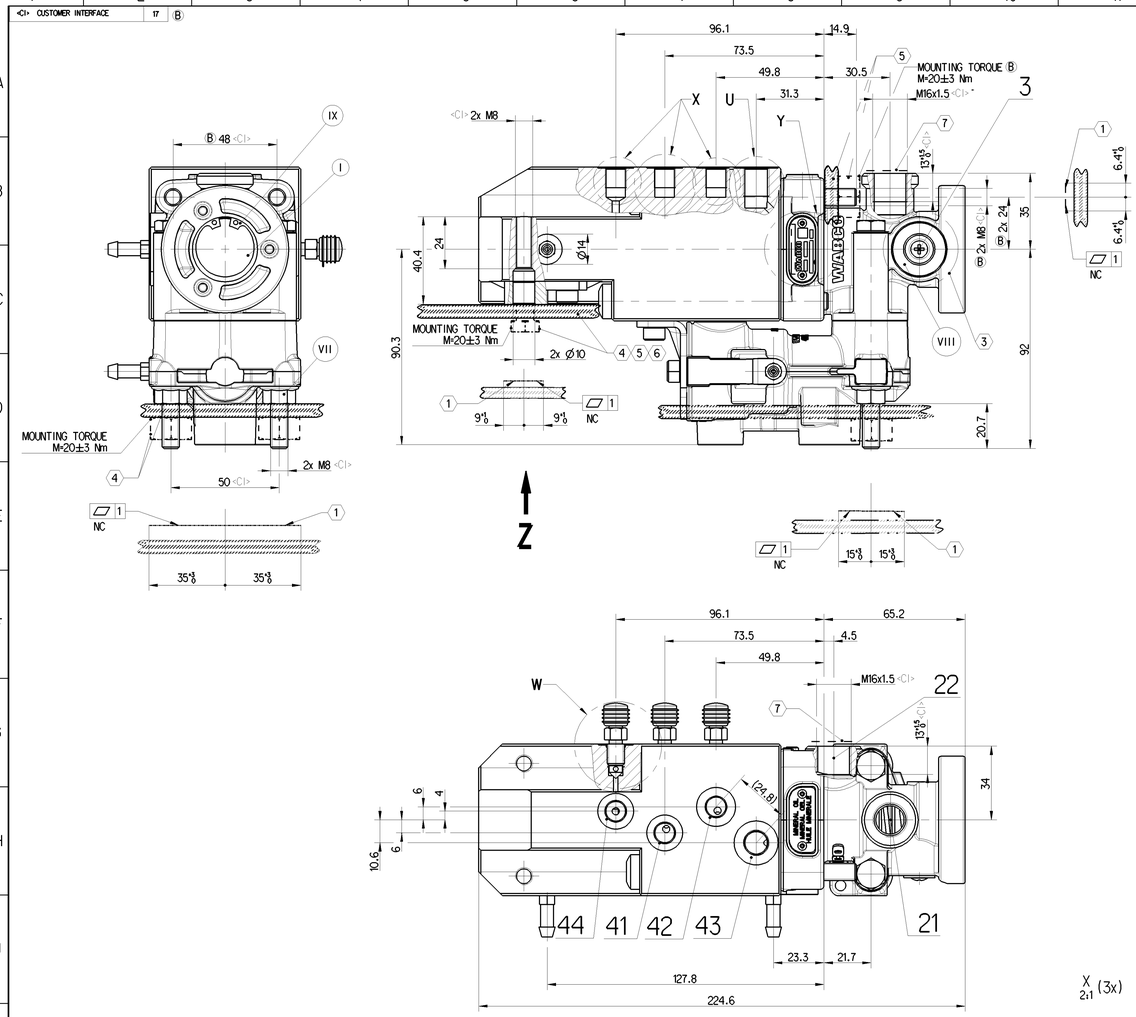

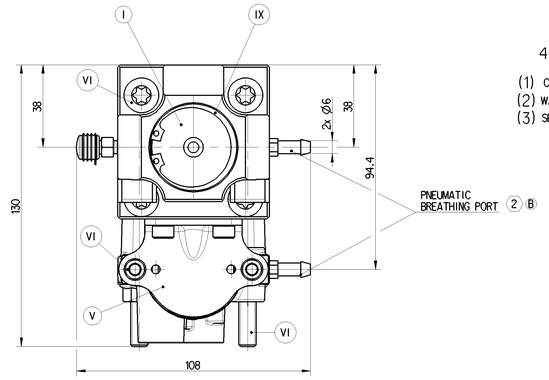

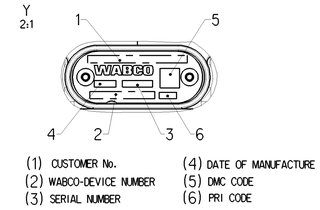

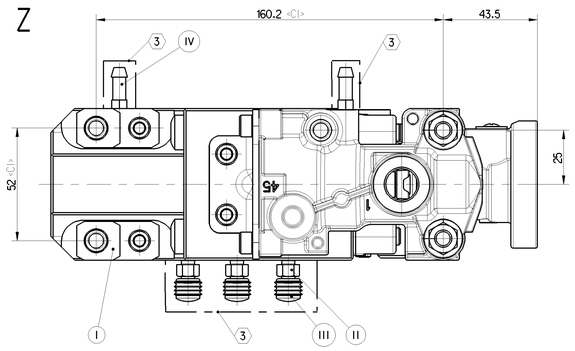

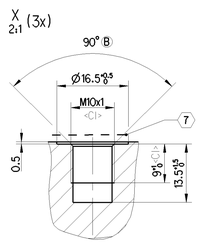

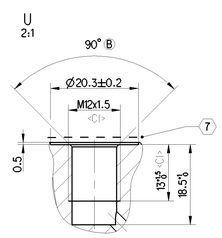

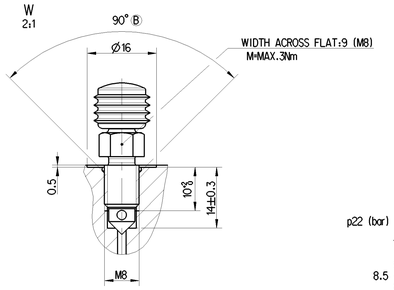

PORT	DESIGNATION	MEDIUM	THREAD	Type	TORQUE
1	Supply Port	Compressed Air	M16x1.5	ISO 9974	MAX.34 Nm
21	Delivery Port	Compressed Air	M16x1.5	ISO 9974	MAX.34 Nm
22	Delivery Port	Compressed Air	M16x1.5	ISO 9974	MAX.34 Nm
41	Control Port	Mineral Oil	M10x1	ISO 9974	MAX.13 Nm
42	Control Port	Mineral Oil	M10x1	ISO 9974	MAX.13 Nm
43	Control Port	Compressed Air	M12x1.5	ISO 9974	MAX.21 Nm
44	Control Port	Mineral Oil	M10x1	ISO 9974	MAX.13 Nm
3	Exhaust	-	-	-	-
	MEDIUM PNEUMATIC PART:			AIR	
	WORKING PRESSURE:			P1/43 max. = 8.5 bar	
	TEMPORARILY:			P1/43 max. = 10 bar	
	MEDIUM HYDRAULIC PART:			MINERAL OIL	
	WORKING PRESSURE:			P44 max.= 40 bar P41/42 max.= 100 bar	
	TEMPORARILY:			P44 max. = 130 bar P41/42 max. = 120 bar	
	HYDRAULIC WORKING VOLUME:			p41 ≦ 1.2 cm^3 p42 ≦ 1.2 cm^3, p44 ≦ 1.5 cm^3	
	RESIDUAL PRESSURE IN THE HYDRAULIC SYSTEM:			p41 ≦ 0.1 bar p42 ≦ 0.1 bar	
	THERMAL RANGE:			-40°C...+80°C	
	TEMPORARILY:			UNPRESSURIZED 1h +110°C	
1	CONTACT SURFACE			-	
2	MIN.LENGTH OF HOSE: 200 mm			-	
3	COVER WHEN PAINTING ON THE VEHICLE			-	
4	CUSTOMER PART FOR MOUNTING OPTION 1			-	
5	CUSTOMER PART FOR MOUNTING OPTION 2			-	
6	MINIMUM THREAD ENGAGEMENT 2 x d			-	
7	PROTECTING PLUG			-	

PART CODE	MATERIAL	SURFACE PROTECTION
I	ALUMINIUM ALLOY	PASSIVATION WITH CHROMIUM
II	FREE CUTTING STEEL	ZINC ALLOY COATING WITH PASSIVATION
III	ISOPRENE NATURAL RUBBER	-
IV	FREE CUTTING STEEL	PASSIVATION FOR ZINC ALLOY STEEL
V	PLAIN STEEL	PASSIVATION FOR ZINC ALLOY STEEL
VI	BOLT CLASS 8.8	ZINC-NICKEL COATING WITH PASSIVATION
VII	NUT CLASS 8	ZINC ALLOY COATING WITH PASSIVATION
VIII	NBR	-
IX	STEEL STRIP FOR SPRINGS	MECHANICAL ZINC COATING

Nominal Diameters			
Breakaway module status	From Port	To Port	Nominal diameter
Open	P1	P21/22	Ø6mm
Closed	P1	P21	Ø1.5mm
n/a	P22	P3	Ø10mm

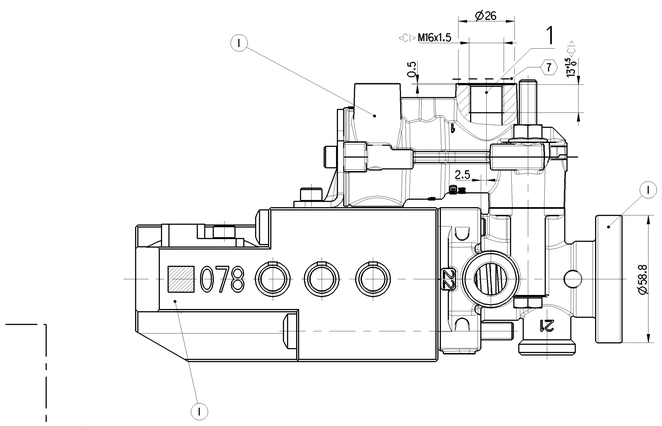

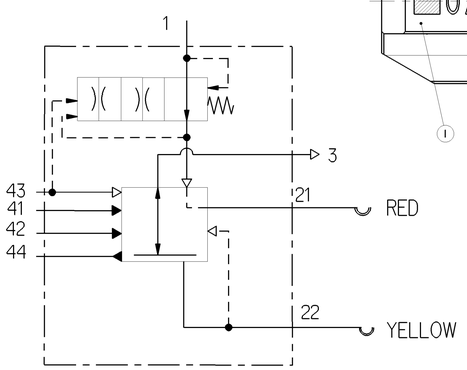

INSTALLATION:
VENTING SCREW MUST BE AT TOP

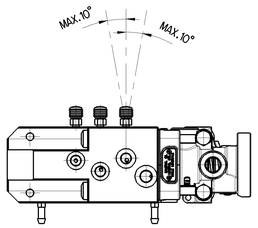

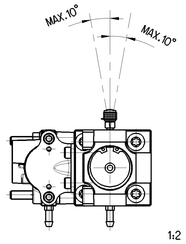

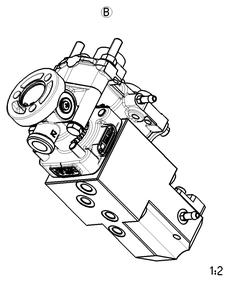

NOMINAL CHARACTERISTIC

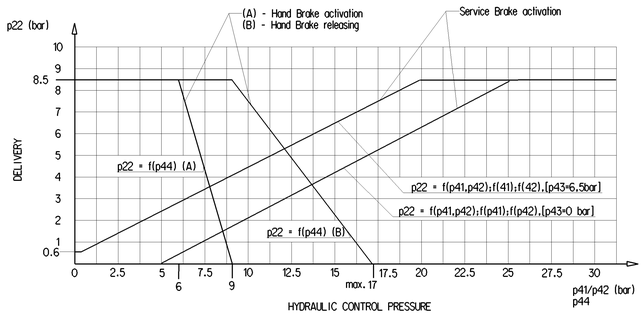

General Specification: ISO 8015, JED-334-1, Size ISO 14405 LP	Copyright WABCO®		WABCO
Further Technical Data:	Date	Signature	TRAILER CONTROL VALVE
Doc. Code: / Sheet: To	Drawn 2022-12-08	Gunasekaran	
General Tolerances JED-261	Checked 2022-12-09	Jdlubowski	
Range of nominal dimensions in mm	Dimensions in mm		
Class 1) ≤ 50 / > 50 ≤ 180 / > 180 ≤ 400 / > 400			
Fine ±0.5 ±1 ±1.5 ±2			
Medium X ±1 ±2 ±3 ±4 ±3°			
Coarse ±2 ±3.5 ±5 ±6.5			
Tapped Holes acc.:			
1) Tolerance Class Applied Crossmarked			

Mass	Scale	Material No.	Date of first issue: 2017-12-07		
2.569 kg	1:1 (2:1,1:2)	470 015 072 0	Doc.Code 005	Language EN	Sheet 1/1
Size A 0	CAD Standard CREO	ECN-No. 511530 / Revision 11x B / Tech. Reg. 5830	Replacement for -		

100mm

Tale immagine o riproduzione, in qualsiasi forma e per qualsiasi scopo, di questo disegno, o di parte di esso, non è consentita senza il previo consenso scritto di WABCO. Questo disegno contiene informazioni proprietarie, che possono essere utilizzate solo per scopi autorizzati da WABCO. Qualsiasi altra copia o riproduzione di questo disegno o parte di esso, così come il suo utilizzo per scopi non autorizzati, sono proibiti.
Weder diese Unterlage noch Auszüge daraus dürfen ohne vorherige schriftliche Genehmigung von WABCO weitergegeben, vervielfältigt oder für andere Zwecke verwendet werden. Ausgenommen hiervon sind die für den vorgesehenen Zweck erforderlichen Kopien und Verwendungen.
Ce dessin ne peut être reproduit, en tout ou partie, sous quelque forme que ce soit, ni être communiqué à des tiers sans accord écrit de WABCO. Ce document contient des informations qui peuvent être utilisées uniquement à des fins autorisées par WABCO. Toute autre copie ou reproduction de ce dessin ou partie de celui-ci, ainsi que son utilisation à des fins non autorisées, sont interdites.
Ten rysunek nie może być w całości ani w części powielany ani udostępniany osobom trzecim bez pisemnej zgody firmy WABCO. Dokument ten zawiera informacje, które mogą być wykorzystane wyłącznie do celów zgodnych z zezwoleniem firmy WABCO. Wszelkie inne kopiowanie lub wykorzystanie tego rysunku lub jego części, jak również jego wykorzystanie do celów niezgodnych z zezwoleniem firmy WABCO są zabronione.