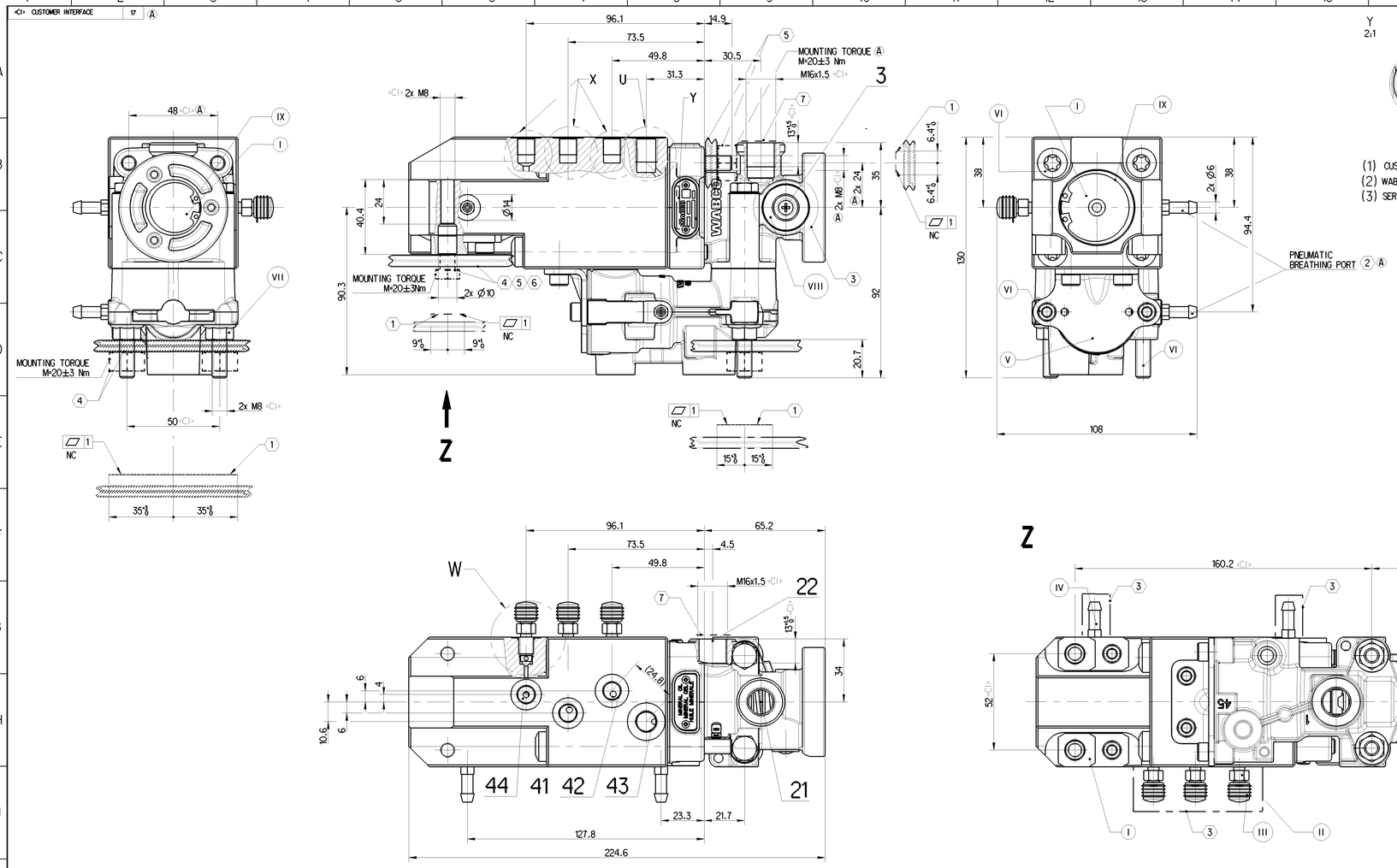

PORT	DESIGNATION	MEDIUM	THREAD	TYPE	TORQUE
1	Supply Port	Compressed Air	M16x1.5	ISO 9974	MAX.34 Nm
21	Delivery Port	Compressed Air	M16x1.5	ISO 9974	MAX.34 Nm
22	Delivery Port	Compressed Air	M16x1.5	ISO 9974	MAX.34 Nm
41	Control Port	Mineral Oil	M10x1	ISO 9974	MAX.13 Nm
42	Control Port	Mineral Oil	M10x1	ISO 9974	MAX.13 Nm
43	Control Port	Compressed Air	M12x1.5	ISO 9974	MAX.21 Nm
44	Control Port	Mineral Oil	M10x1	ISO 9974	MAX.13 Nm
3	Exhaust	-	-	-	-

	MEDIUM PNEUMATIC PART:	AIR
	WORKING PRESSURE:	P1/43 max. = 8.5 bar
	TEMPORARILY:	P1/43 max. = 10 bar
	MEDIUM HYDRAULIC PART:	MINERAL OIL
	WORKING PRESSURE:	P44 max.= 40 bar P41/42 max.= 100 bar
	TEMPORARILY:	P44 max. = 130 bar P41/42 max. = 120 bar
	HYDRAULIC WORKING VOLUME:	p41≦1.0 cm³ p42≦1.0 cm³ ,p44≦ 1.5 cm³
	RESIDUAL PRESSURE IN THE HYDRAULIC SYSTEM:	p41 ≦ 0.1 bar p42 ≦ 0.1 bar
	THERMAL RANGE:	-40°C...+80°C
	TEMPORARILY:	UNPRESSURIZED 1h +110°C
1	CONTACT SURFACE	-
2	MIN.LENGTH OF HOSE: 200 mm	-
3	COVER WHEN PAINTING ON THE VEHICLE	-
4	CUSTOMER PART FOR ASSEMBLY OPTION 1	-
5	CUSTOMER PART FOR ASSEMBLY OPTION 2	-
6	MINIMUM THREAD ENGAGEMENT 2xd	-
7	PROTECTING PLUG	-

PART CODE	MATERIAL	SURFACE PROTECTION
I	ALUMINIUM ALLOY	PASSIVATION WITH CHROMIUM
II	FREE CUTTING STEEL	ZINC ALLOY COATING WITH PASSIVATION
III	ISOPRENE NATURAL RUBBER	-
IV	FREE CUTTING STEEL	PASSIVATION FOR ZINC ALLOY STEEL
V	PLAIN STEEL	PASSIVATION FOR ZINC ALLOY STEEL
VI	BOLT CLASS 8.8	ZINC-NICKEL COATING WITH PASSIVATION
VII	NUT CLASS 8	ZINC ALLOY COATING WITH PASSIVATION
VIII	NBR	-
IX	STEEL STRIP FOR SPRINGS	MECHANICAL ZINC COATING

Nominal Diameters

Breakaway module status	From Port	To Port	Nominal diameter
Open	P1	P21/22	Ø6mm
Closed	P1	P21	Ø1.5mm
n/a	P22	P3	Ø10mm

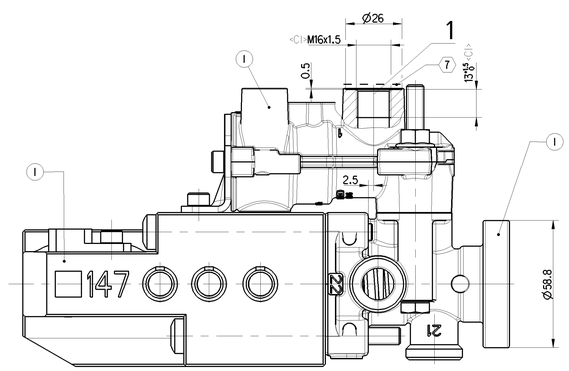

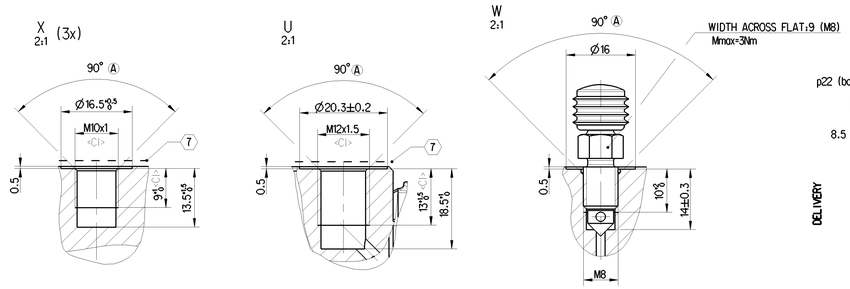

NOMINAL CHARACTERISTIC

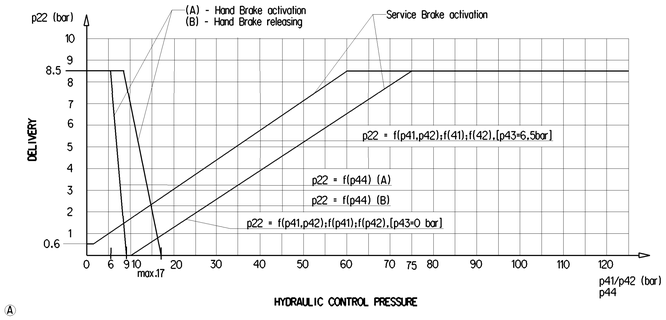

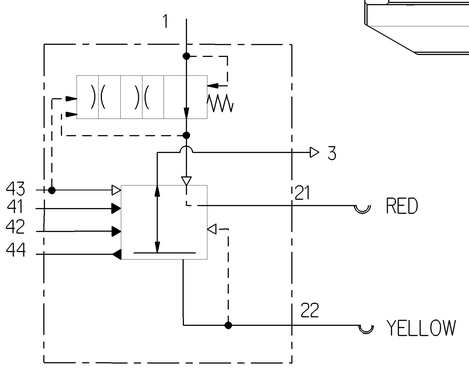

INSTALLATION:
VENTING SCREW MUST BE AT TOP

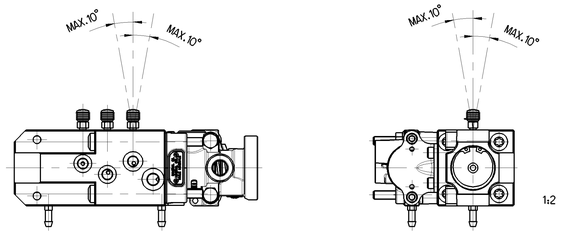

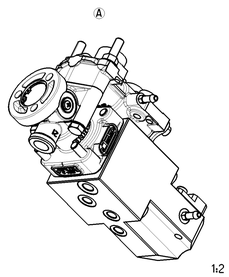

General Specification: ISO 8015, JED-354-1, Sze ISO 14405 LP			Copyright WABCO®		WABCO
Further Technical Data:			Date	Signature	TRAILER CONTROL VALVE
Doc. Code:	Sheet:	To	2022-12-08	Gunasekaran	
General Tolerances JED-261			Checked		
Range of nominal dimensions in mm			2022-12-09	Jdlubowski	
Class 1)	≤ 50 / > 50 ≤ 180 / > 180 ≤ 400 / > 400		Dimensions in mm		
Fine	±0.5 / ±1 / ±1.5 / ±2	±3°	Mass: 2.572 kg	Scale: 1:1 (2:1,1:2)	Material No.: 470 015 073 0
Medium X	±1 / ±2 / ±3 / ±4		Size: A0	CAD System: CREO	Doc.Code: 005 / Language: EN / Sheet: 1/1
Coarse	±2 / ±3.5 / ±5 / ±6.5				Date of first issue: 2017-12-07
Tapped Holes acc.:					
1) Tolerance Class Applied Crossmarked					

ECN No.	Revision	Tech. Resp.	Replacement for
516530	11x A	5830	-

100mm

This information is provided to a third party subject to the conditions of the contract signed between the parties. Any other use, reproduction, disclosure, modification, adaptation, publication, translation, computer storage, or communication to any other third party is prohibited. Except for the purpose for which it is intended, no part of this document may be reproduced in any form or by any means without prior written permission of WABCO. Unless otherwise agreed in writing, WABCO makes no representation or warranty regarding the accuracy or completeness of the information contained in this document. WABCO shall not be liable for any loss or damage caused by reliance on the information contained in this document. In no event WABCO shall be liable for any direct, indirect, incidental, special or consequential damages.

Toute transmission à quelque tiers que ce soit est soumise aux conditions du contrat signé entre les parties. Toute autre utilisation, reproduction, divulgation, modification, adaptation, publication, traduction, mémorisation informatique ou communication à un tiers tiers est interdite. Sauf à des fins pour lesquelles elle a été conçue, aucune partie de ce document ne peut être reproduite sous quelque forme ou par quelque moyen que ce soit sans autorisation préalable écrite de WABCO. Sauf convention écrite contraire, WABCO ne fait aucune déclaration ni garantie quant à l'exactitude ou l'exhaustivité des informations contenues dans ce document. WABCO ne saurait être tenue pour responsable de toute perte ou dommage causé par le recours à ce document. En aucun cas WABCO ne saurait être tenue pour responsable de tout dommage direct, indirect, accessoire ou spécial ou de dommages consécutifs.