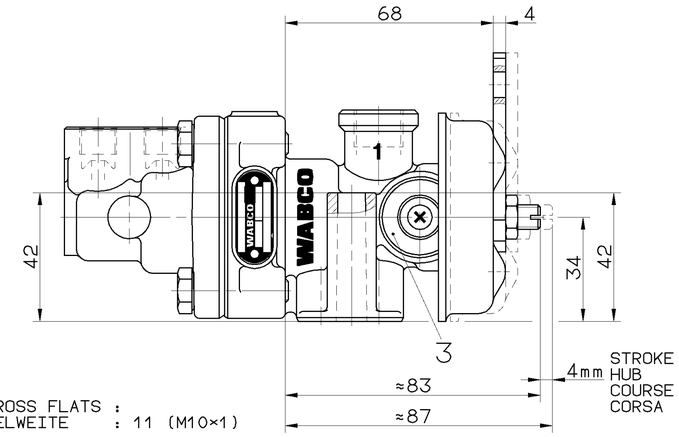

HYDRAULIC CONTROL PRESSURE
HYDRAULISCHER STEUERDRUCK
PRESSION HYDRAULIQUE DE COMMANDE
PRESSIONE IDRAULICO DI COMANDO

WIDTH ACROSS FLATS :
SCHLUESSELWEITE : 11 (M10×1)
SURPLATS :
LARGHEZZA IN CHIAVE :
Ⓔ M=7±3Nm

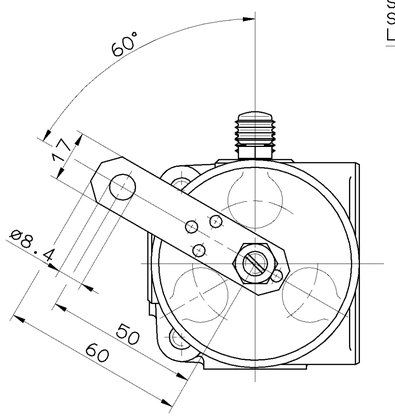

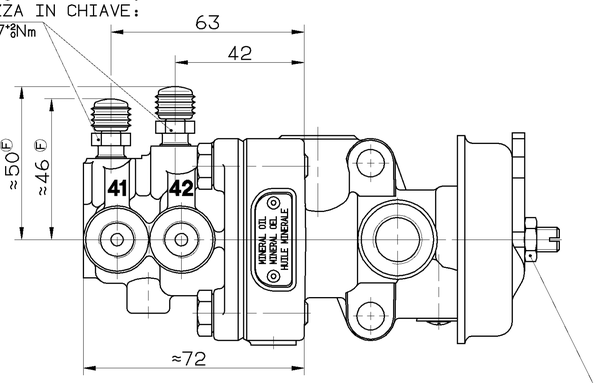

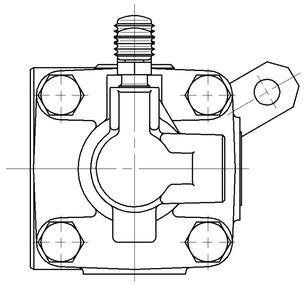

MARKED WITH RED PAINT
MIT ROTEM LACK GEKENNZEICHNET
MARQUE AVEC VERNIS ROUGE
MARCARE CON VERNICE ROSSA

1	SUPPLY VORRAT ALIMENTATION ALIMENTAZIONE	
2	OUTLET AUSGANG SORTIE USCITA	
3	EXHAUST ENTLUEFTUNG ECHAPPEMENT SCARICO	
41/42	HYDRAULIC CONTROL PRESSURE HYDRAULISCHER STEUERDRUCK PRESSION HYDRAULIQUE DE COMMANDE PRESSIONE IDRAULICO DI COMANDO	

MEDIUM PNEUMATIC PART: AIR
MEDIUM PNEUMATIKTEIL: LUFT
FLUIDE PARTIE PNEUMATIQUE: AIR
FLUIDO PARTE PNEUMATICA: ARIA

WORKING PRESSURE:
BETRIEBSDRUCK:
PRESSION D'UTILISATION: p_e max.= 7 bar (TEMPORARILY: (KURZZEITIG: (DE COURTE DUREE: (BREVE TEMPO SOLO: p_e max.= 10 bar)
PRESSIONE DI ESERCIZIO:

MEDIUM HYDRAULIC PART: MINERAL OIL
MEDIUM HYDRAULIKTEIL: MINERALOEL
FLUIDE PARTIE HYDRAULIQUE: HUILE MINERALE
FLUIDO PARTE IDRAULICA: OLIO MINERALE

WORKING PRESSURE:
BETRIEBSDRUCK:
PRESSION D'UTILISATION: p_e max.= 50 bar (TEMPORARILY: (KURZZEITIG: (DE COURTE DUREE: (BREVE TEMPO SOLO: p_e max.= 120 bar)
PRESSIONE DI ESERCIZIO:

HYDRAULIC WORKING VOLUME:
HYDRAULISCHES ARBEITSVOLUMEN: 41 ≤2.2 cm³
VOLUME HYDRAULIQUE ABSORBE:
VOLUME IDRAULICO ASSORBITO: 42 ≤2.2 cm³

RESIDUAL PRESSURE IN THE HYDRAULIC SYSTEM: p_{41} ≤ 0.1 bar
RUECKHALTEDRUCK IM HYDRAULIKSYSTEM:
PRESSION DE RETENUE AU SYSTEME HYDRAULIQUE: p_{42} ≤ 0.1 bar
PRESSIONE DI RITENUTA NEL SISTEMA IDRAULICO:

THERMAL RANGE OF APPLICATION:
THERMISCHER ANWENDUNGSBEREICH: -40°C...+80°C
GAMME D'APPLICATION THERMIQUE:
CAMPO DI APPLICAZIONE TERMICA:

INSTALLATION: VENTING SCREW MUST BE AT TOP
EINBAULAGE: ENTLUEFTUNGSSCHRAUBE MUSS NACH OBEN ZEIGEN
POSITION D'INSTALLATION: BOUCHON DE PURGE DOIT ETRE MONTE EN HAUT
POSIZIONE DI MONTAGGIO: LA VITE DI SCARICO DEVE ESSERE IN ALTO

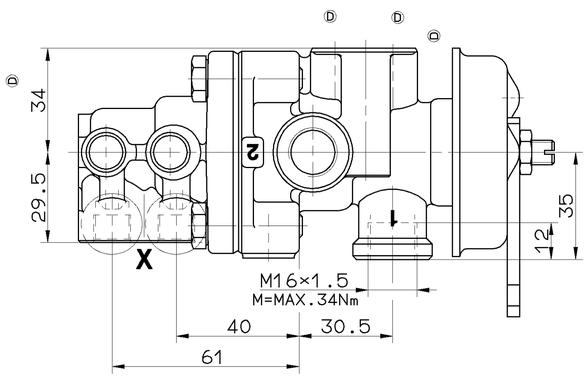

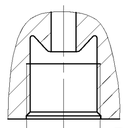

X 2:1

DIN 74235-EL
M12×1 A
M=MAX.21Nm

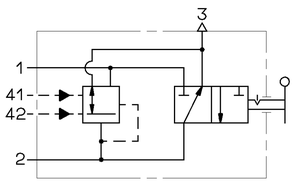

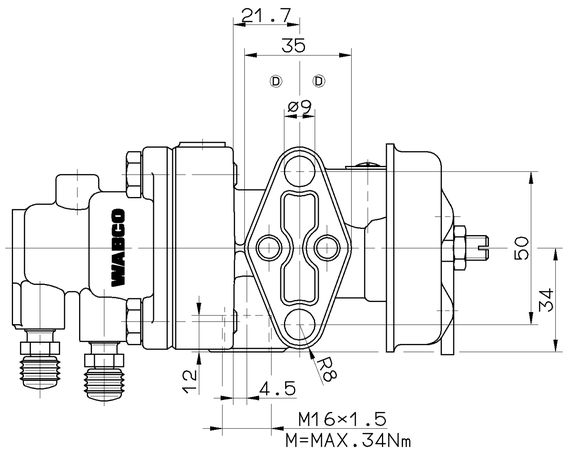

POSITION OF LEVER HEBELSTELLUNG POSITION DU LEVIER POSIZIONE DELLA LEVA		I	II
	P1	7 bar	7 bar
	P2	0 bar	7 bar

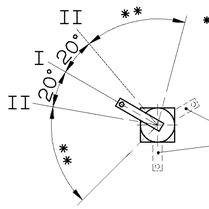

ADDITIONAL STROKE:
UEBERHUB:
** COURSE ADDITIONELLE: MAX. 55°
SOVRACCORSA:

HANDBRAKE LEVER
ADJUSTABLE BY 120°
HANDBREMSHEBEL
VERSTELLBAR UM 120°
LEVIER DU FREIN
A MAIN REGLABLE
TOUS LES 120°
LEVA DI COMMANDO
A MANNO REGOLABILE 120°

GENERAL SPECIFICATION: JED-334						
FURTHER TECHNICAL DATA:						
DOC. CODE:			SHEET:	TO		
GENERAL TOLERANCES						
CLASS 1)		RANGE OF NOMINAL DIMENSIONS (± mm) ≤50	>50 ≤180	>180 ≤400	>400	
FINE		0,5	1,0	1,5	2,0	
MEDIUM	X	1,0	2,0	3,0	4,0	± 3°
COARSE		2,0	3,5	5,0	6,5	
TAPPED HOLES ACC. ISO 4039 / JED-152						
1) TOLERANCE CLASS APPLIED CROSSMARKED						

DCN-NO.	REV.	DATE
060583	2×F	99-04-09
059678	1×E	99-02-09
059616	6×D	97-07-31
051798	1×C	94-12-01

100mm

CADAM-DRAWING COPYRIGHT
DATE SIGNATURE
DRAWN: 94-12-01 GIESEKE
CHECKED: MB
STANDARDIZATION: SOMMER

WABCO

TRAILER CONTROL VALVE
ANHAENGER-STEUERVENTIL
VALVE DE COMMANDE DE REM.
VALVOLA DI COMANDO FR. RI.

MASS	SCALE	PRODUCT IDENTIFICATION NO.	DOC. CODE	SHEET
1.4 KG	1:1 (2:1)	470 015 201 0	605	1/1
SIZE A 1	T.R.I. 140	SHAPE CODE	REPLACEMENT FOR 470 015 201 0 (C) GF 92-07-16	

EXPERT CODE 7 3 7

PRODUCT TYPE 0 1 X

TUTTE COMMUNICAZIONI OU SIPRODUZIONE DI CIE DOCUMENT, TUTTE EXPLOITATION DU COMMUNICATION DE SON CONTE-NUDIT ENTIEREMENT DE TOUTE AUTRE NOT ESTE DOMAINE DE TERCEROS, TODO DERECHO DE REPRODUCIR NUDO ESTA PROHIBIDO. ESTE DOCUMENTO ES PROPIEDAD DE TERCEROS, TODO DERECHO DE REPRODUCIR NUDO ESTA PROHIBIDO. ESTE DOCUMENTO ES PROPIEDAD DE TERCEROS, TODO DERECHO DE REPRODUCIR NUDO ESTA PROHIBIDO.
NON È PERMESSO CONSEGNARE A TERZI O RIPRODURRE QUESTO DOCUMENTO, NÉ UTILIZZARNE IL CONTENUTO O RIVELARNE ESPLICITAMENTE ALTRI AL DI FUORI DEI DESTINATARI. TUTTI I DIRITTI RISERVATI. VERTRAULICHE DATEN, WELCHE DER EIGENTÜMER DA ANDERE NICHT ZUGÄNGLICH MACHEN DÜRFEN. ALLE RECHTE VORBEHALTEN.
NOT TO BE DISCLOSED TO THIRD PARTIES OR REPRODUCED. ALL RIGHTS RESERVED.
NOT TO BE DISCLOSED TO THIRD PARTIES OR REPRODUCED. ALL RIGHTS RESERVED.
NOT TO BE DISCLOSED TO THIRD PARTIES OR REPRODUCED. ALL RIGHTS RESERVED.

1/029/016/0/04.93
6000/A03