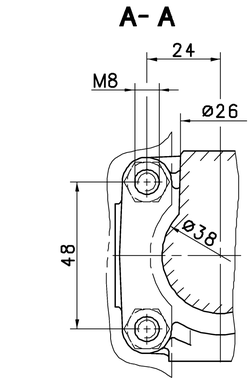


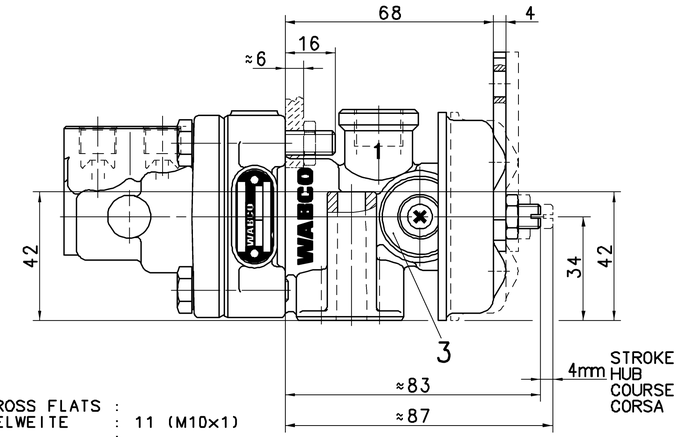


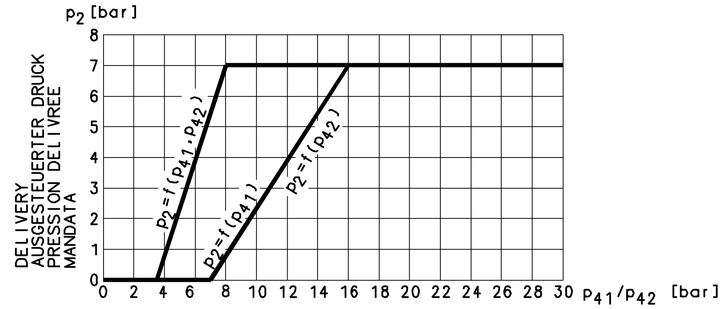


HYDRAULIC CONTROL PRESSURE
HYDRAULISCHER STEUERDRUCK
PRESSION HYDRAULIQUE DE COMMANDE
PRESSIONE IDRAULICO DI COMANDO

WIDTH ACROSS FLATS :
SCHLUESSELWEITE : 11 (M10x1)
SURPLATS :
LARGHEZZA IN CHIAVE:
M=7±1Nm

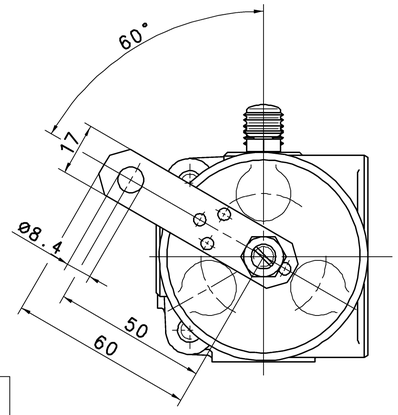


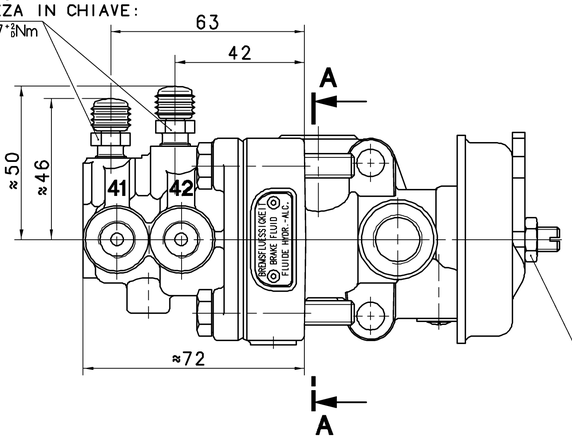


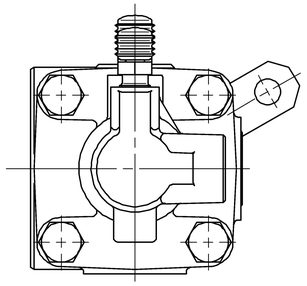

MARKED WITH RED PAINT
MIT ROTEM LACK GEKENNZEICHNET
MARQUE AVEC VERNIS ROUGE
MARCARE CON VERNICE ROSSA

1 SUPPLY / VORRAT / ALIMENTATION / ALIMENTAZIONE
2 OUTLET / AUSGANG / SORTIE / USCITA
3 EXHAUST / ENTLUEFTUNG / ECHAPPEMENT / SCARICO

41/42 HYDRAULIC CONTROL PRESSURE
HYDRAULISCHER STEUERDRUCK
PRESSION HYDRAULIQUE DE COMMANDE
PRESSIONE IDRAULICO DI COMANDO

MEDIUM PNEUMATIC PART: AIR
MEDIUM PNEUMATIKTEIL: LUFT
FLUIDE PARTIE PNEUMATIQUE: AIR
FLUIDO PARTE PNEUMATICA: ARIA

WORKING PRESSURE:
BETRIEBSDRUCK:
PRESSION D'UTILISATION: Pe max. = 7 bar (TEMPORARILY: / KURZZEITIG: / DE COURTE DUREE: / BREVE TEMPO SOLO: Pe max. = 10 bar)
PRESSIONE DI ESERCIZIO:

MEDIUM HYDRAULIC PART: BRAKE FLUID
MEDIUM HYDRAULIKTEIL: BREMSFLUESSIGKEIT
FLUIDE PARTIE HYDRAULIQUE: LIQUIDE DE FREIN
FLUIDO PARTE IDRAULICA: LIQUIDO PER FRENI

WORKING PRESSURE:
BETRIEBSDRUCK:
PRESSION D'UTILISATION: Pe max. = 50 bar (TEMPORARILY: / KURZZEITIG: / DE COURTE DUREE: / BREVE TEMPO SOLO: Pe max. = 120 bar)
PRESSIONE DI ESERCIZIO:

HYDRAULIC WORKING VOLUME:
HYDRAULISCHES ARBEITSVOLUMEN: 41 ≤2.2 cm³
VOLUME HYDRAULIQUE ABSORBE:
VOLUME IDRAULICO ASSORBITO: 42 ≤2.2 cm³

RESIDUAL PRESSURE IN THE HYDRAULIC SYSTEM:
RUECKHALTEDRUCK IM HYDRAULIKSYSTEM: $p_{41}$ ≤ 0.1 bar
PRESSION DE RETENUE AU SYSTEME HYDRAULIQUE:
PRESSIONE DI RITENUTA NEL SISTEMA IDRAULICO: $p_{42}$ ≤ 0.1 bar

THERMAL RANGE OF APPLICATION:
THERMISCHER ANWENDUNGSBEREICH:
GAMME D'APPLICATION THERMIQUE: -40°C...+80°C
CAMPO DI APPLICAZIONE TERMICA:

INSTALLATION: VENTING SCREW MUST BE AT TOP
EINBAULAGE: ENTLUEFTUNGSSCHRAUBE MUSS NACH OBEN ZEIGEN
POSITION D'INSTALLATION: BOUCHON DE PURGE DOIT ETRE MONTE EN HAUT
POSIZIONE DI MONTAGGIO: LA VITE DI SCARICO DEVE ESSERE IN ALTO

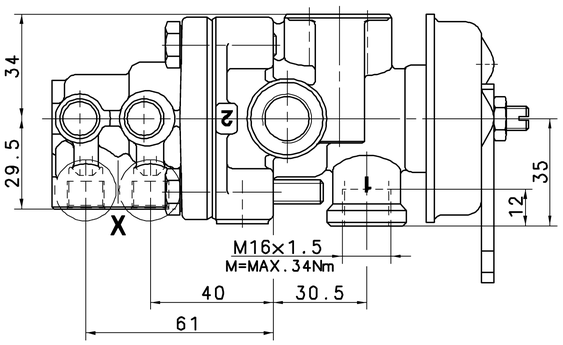


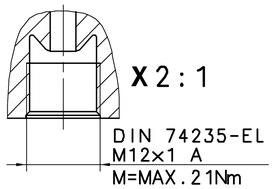


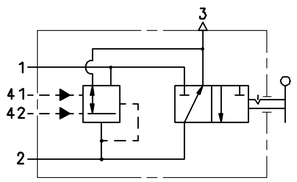


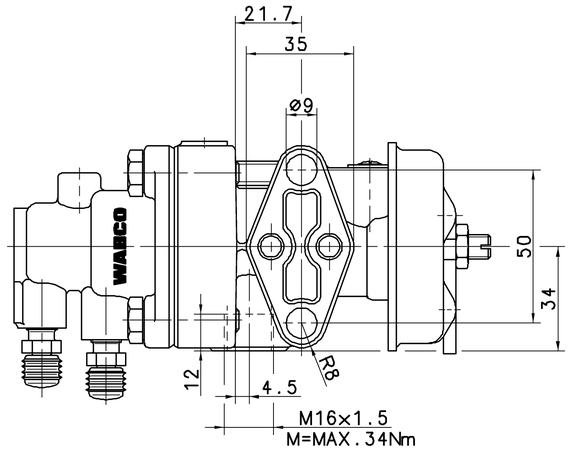


| POSITION OF LEVER / HEBELSTELLUNG / POSITION DU LEVIER / POSIZIONE DELLA LEVA | | I | II |
|---|---|---|---|
| | P1 | 7 bar | 7 bar |
| | P2 | 0 bar | 7 bar |

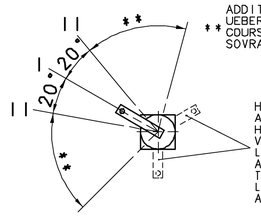


ADDITIONAL STROKE:
UEBERHUB:
** COURSE ADDITIONELLE: MAX. 55°
SOVRACCORSA:

HANDBRAKE LEVER
ADJUSTABLE BY 120°
HANDBREMSHEBEL
VERSTELLBAR UM 120°
LEVIER DU FREIN
A MAIN REGLABLE
TOUS LES 120°
LEVA DI COMMANDO
A MANNO REGOLABILE 120°

| GENERAL SPECIFICATION: JED-334 | | | | | |
|---|---|---|---|---|---|
| FURTHER TECHNICAL DATA: | | | | | |
| DOC. CODE: | | SHEET: 10 | | | |
| GENERAL TOLERANCES | | | | | |
| CLASS 1) | RANGE OF NOMINAL DIMENSIONS ( ± mm ) ≤50 | >50 ≤180 | >180 ≤400 | >400 | |
| FINE | | 0,5 | 1,0 | 1,5 | 2,0 | |
| MEDIUM | X | 1,0 | 2,0 | 3,0 | 4,0 | ± 3° |
| COARSE | | 2,0 | 3,5 | 5,0 | 6,5 | |
| TAPPED HOLES ACC. ISO 4039 / JED-152 | | | | | | |
| 1) TOLERANCE CLASS APPLIED CROSSMARKED | | | | | | |

| DGN-NO. | REV. | DATE |
|---|---|---|
| | | |

100mm

CADAM-DRAWING COPYRIGHT

| DATE | SIGNATURE |
|---|---|
| DRAWN: 04-11-25 | ROEVER |
| CHECKED: 04-11-25 | FABIAN |
| STANDARDIZATION: | |

WABCO

TRAILER CONTROL VALVE
ANHAENGER-STEUERVENTIL
VALVE DE COMMANDE DE REM.
VALVOLA DI COMANDO FR. RI.

| MASS | SCALE | PRODUCT IDENTIFICATION NO. | DOC. CODE | SHEET |
|---|---|---|---|---|
| 1.4 KG | 1:1 (2:1) | 470 015 202 0 | 605 | 1/1 |
| SIZE A 1 | T.R.I. 530 | | SHAPE CODE | REPLACEMENT FOR |

EXPERT CODE 7 3 7

PRODUCT TYPE 0 1 X

1989/016/3/04-83

603/603

TOUTE COMMUNICATION OU REPRODUCTION DE CE DOCUMENT, TOUTE EXPLOITATION OU COMMUNICATION DE SON CONTENU OU NON-ENVOI D'ENTREE PEUVENT ETRE ENTREPRIS ET SANCTIONNES SANS AUTORISATION ECRITE. TOUS DROITS DE PROPRIETE INDUSTRIELLE OU DE DROIT D'UTILITE SONT RESERVES.

MITTEILUNG SOWIE VERVIELFAELTIGUNG DIESER UNTERLAGE, VERWERTUNG UND MITTEILUNG IHRES INHALTS NICHT GESTATTET SOWEIT NICHT AUSDRUECKLICH ZUGESTANDEN. ZUWIDERHANDLUNGEN VERPFLICHTEN ZUM SCHADENSERSATZ. FUER DIE ERTEILUNG VON PATENT- OD. GEBRAUCHSMUSTEREINTRAGUNG VORBEHALTEN.

NON E PERMESSO CONSEGNARE A TERZI O RIPRODURRE QUESTO DOCUMENTO, NE UTILIZZARNE IL CONTENUTO O RENDERLO ACCESSIBILE A TERZI. TUTTI I DIRITTI DI PROPRIETA INDUSTRIALE O DI UTILITA' SONO RISERVATI.

COPYING OF THIS DOCUMENT AND GIVING IT TO OTHERS AND THE USE OF COMMUNICATION OF THE CONTENTS THEREOF ARE NOT PERMITTED WITHOUT AUTHORITY. INFRINGERS ARE LIABLE TO PAY DAMAGES. ALL RIGHTS ARE RESERVED IN THE EVENT OF THE GRANT OF PATENT OR REGISTRATION OF A UTILITY MODEL OR DESIGN. THIS DOCUMENT IS THE SUBJECT OF COPYRIGHT.