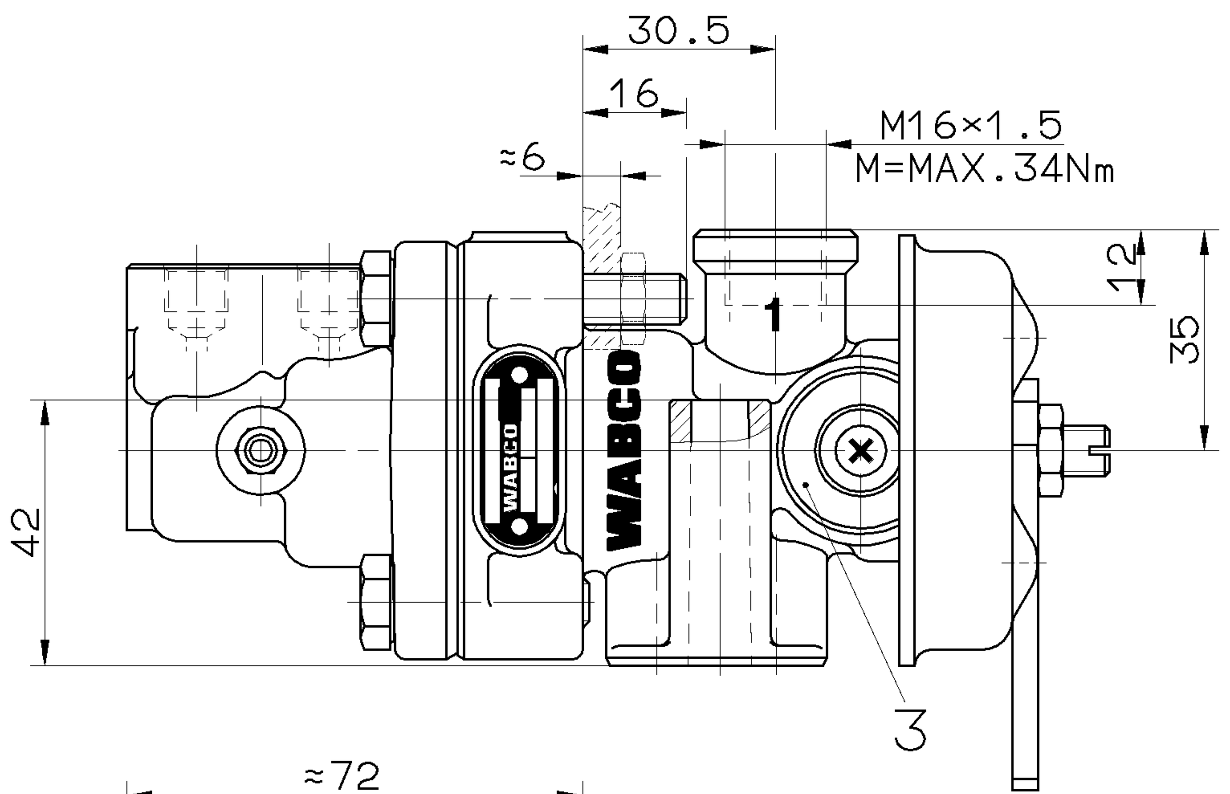

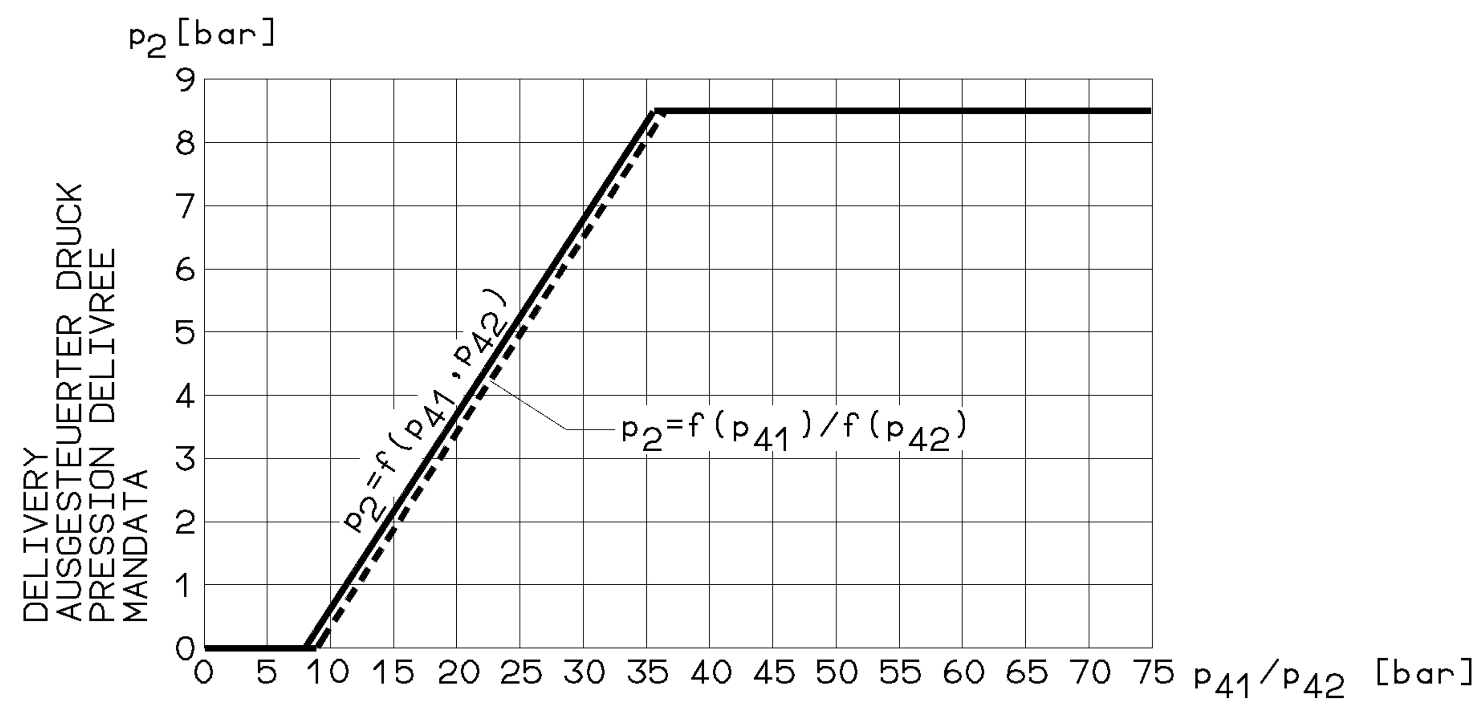

HYDRAULIC CONTROL PRESSURE
HYDRAULISCHER STEUERDRUCK
PRESSION HYDRAULIQUE DE COMMANDE
PRESSIONE IDRAULICO DI COMANDO

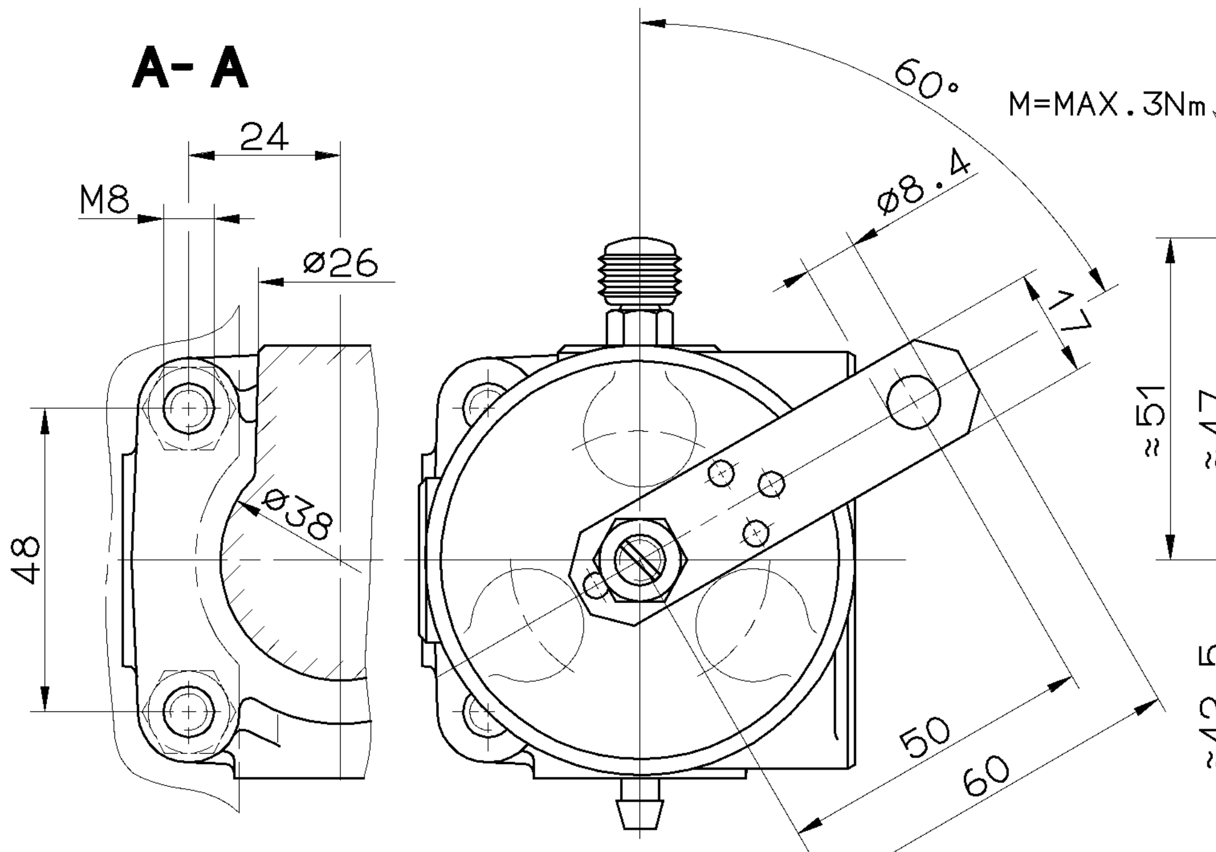

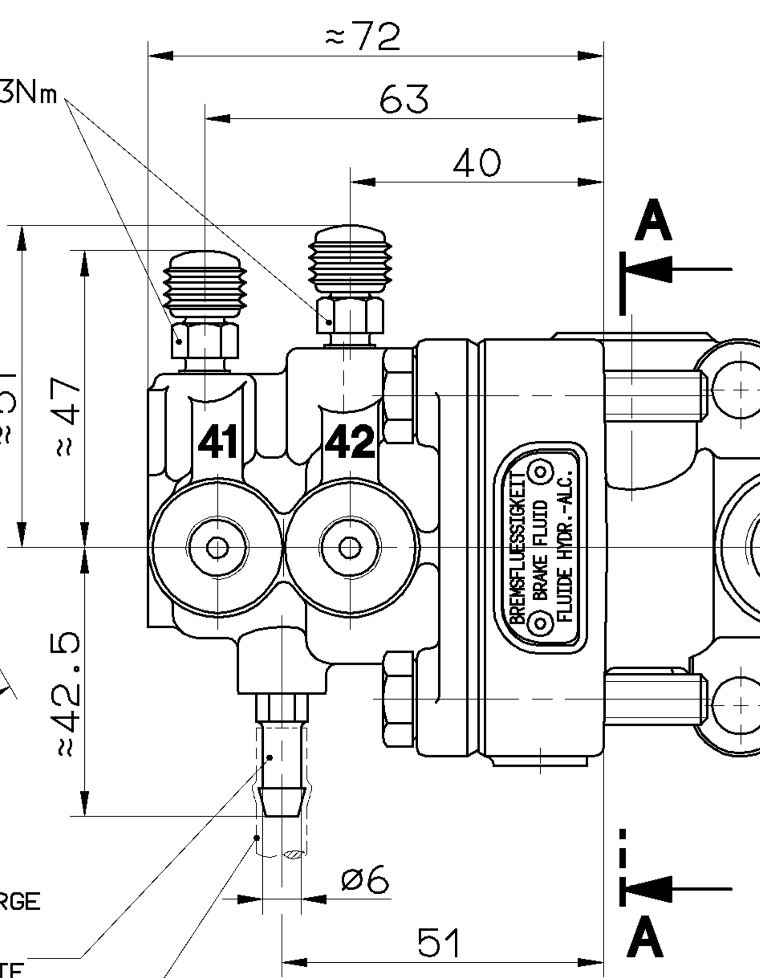

LEAK OIL DISCHARGE
LECKOELABFLUSS
RECUPERATION DE L' HUILE DE FUITE
RECUPRERO DELL' OLIO DEFLUITO

MIN. LENGTH OF HOSE:
MINDEST-SCHLAUCHLAENGE:
LONGUEUR DE FLEXIBLE MINI: 200mm
LUNGHEZZA DI FLESSIBILE MIN:

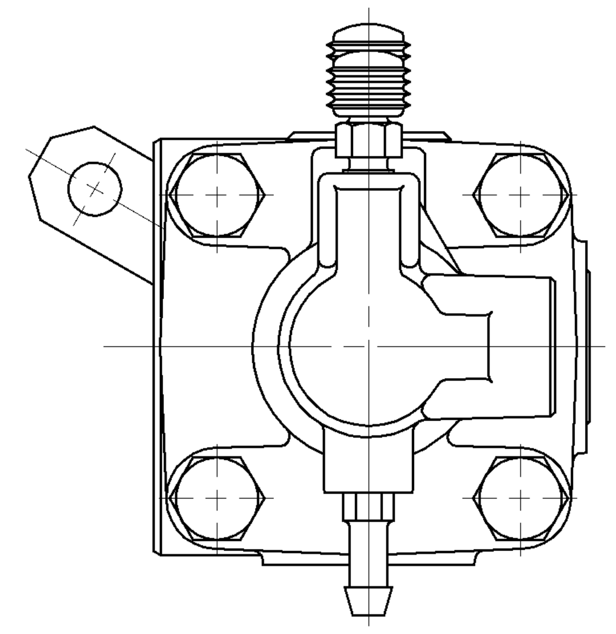

1	SUPPLY VORRAT ALIMENTATION ALIMENTAZIONE	2	OUTLET AUSGANG SORTIE USCITA	3	EXHAUST ENTLUEFTUNG ECHAPPEMENT SCARICO

41/42 HYDRAULIC CONTROL PRESSURE
HYDRAULISCHER STEUERDRUCK
PRESSION HYDRAULIQUE DE COMMANDE
PRESSIONE IDRAULICO DI COMANDO

MEDIUM PNEUMATIC PART: AIR
MEDIUM PNEUMATIKTEIL: LUFT
FLUIDE PARTIE PNEUMATIQUE: AIR
FLUIDO PARTE PNEUMATICA: ARIA

WORKING PRESSURE:
BETRIEBSDRUCK:
PRESSION D'UTILISATION: $p_{e\ max.}$ = 8.5 bar (TEMPORARILY: (KURZZEITIG: (DE COURTE DUREE: (BREVE TEMPO SOLO: $p_{e\ max.}$ = 10 bar)
PRESSIONE DI ESERCIZIO:

MEDIUM HYDRAULIC PART: BRAKE FLUID
MEDIUM HYDRAULIKTEIL: BREMSFLUESSIGKEIT
FLUIDE PARTIE HYDRAULIQUE: LIQUIDE DE FREIN
FLUIDO PARTE IDRAULICA: LIQUIDO PER FRENI

WORKING PRESSURE:
BETRIEBSDRUCK:
PRESSION D'UTILISATION: $p_{e\ max.}$ = 50 bar (TEMPORARILY: (KURZZEITIG: (DE COURTE DUREE: (BREVE TEMPO SOLO: $p_{e\ max.}$ = 120 bar)
PRESSIONE DI ESERCIZIO:

HYDRAULIC WORKING VOLUME:
HYDRAULISCHES ARBEITSVOLUMEN: 41 ≤0.6 cm³
VOLUME HYDRAULIQUE ABSORBE: 42 ≤0.6 cm³
VOLUME IDRAULICO ASSORBITO:

RESIDUAL PRESSURE IN THE HYDRAULIC SYSTEM:
RUECKHALTEDRUCK IM HYDRAULIKSYSTEM: p_{41} ≤ 0.1 bar
PRESSION DE RETENUE AU SYSTEME HYDRAULIQUE: p_{42} ≤ 0.1 bar
PRESSIONE DI RITENUTA NEL SISTEMA IDRAULICO:

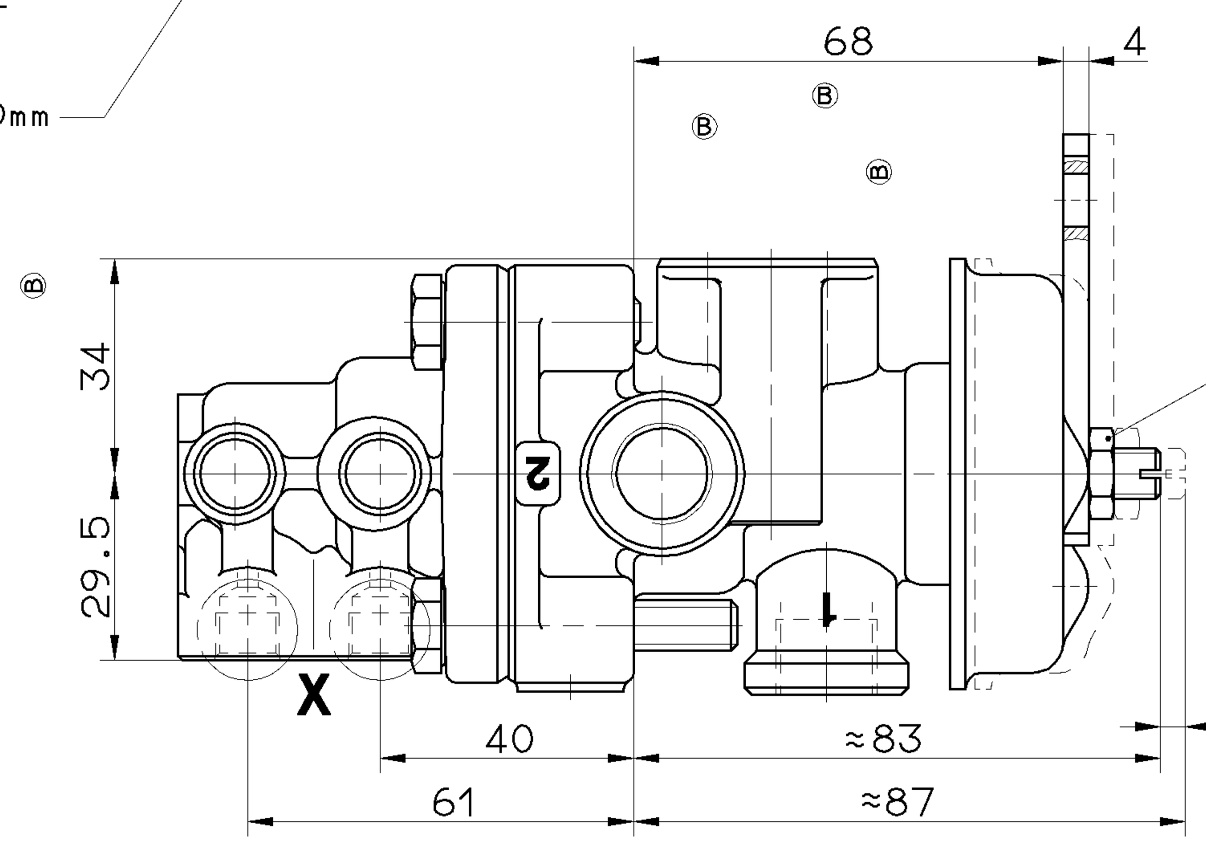

MARKED WITH RED PAINT
MIT ROTEM LACK GEKENNZEICHNET
MARQUE AVEC VERNIS ROUGE
MARCARE CON VERNICE ROSSA

4mm STROKE
HUB
COURSE
CORSA

THERMAL RANGE OF APPLICATION:
THERMISCHER ANWENDUNGSBEREICH: -40° C...+80° C
GAMME D'APPLICATION THERMIQUE:
CAMPO DI APPLICAZIONE TERMICA:

INSTALLATION: VENTING SCREW MUST BE AT TOP
EINBAULAGE: ENTLUEFTUNGSSCHRAUBE MUSS NACH OBEN ZEIGEN
POSITION D'INSTALLATION: BOUCHON DE PURGE DOIT ETRE MONTE EN HAUT
POSIZIONE DI MONTAGGIO: LA VITE DI SCARICO DEVE ESSERE IN ALTO

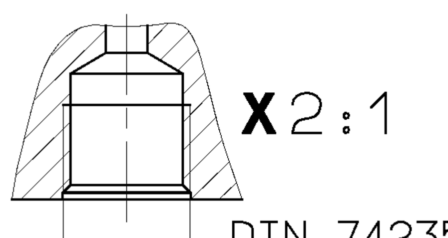

DIN 74235-FL
M10×1 A
M=MAX.13Nm

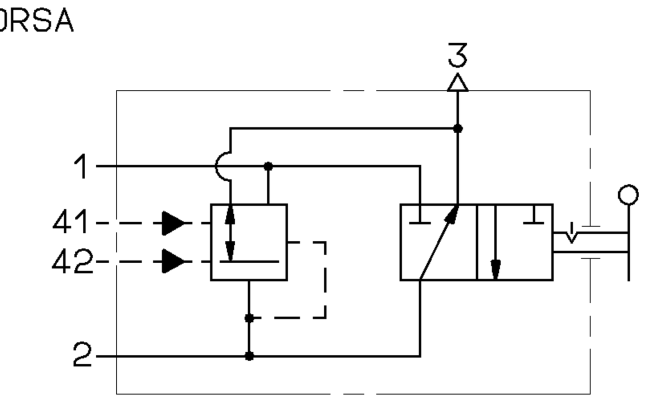

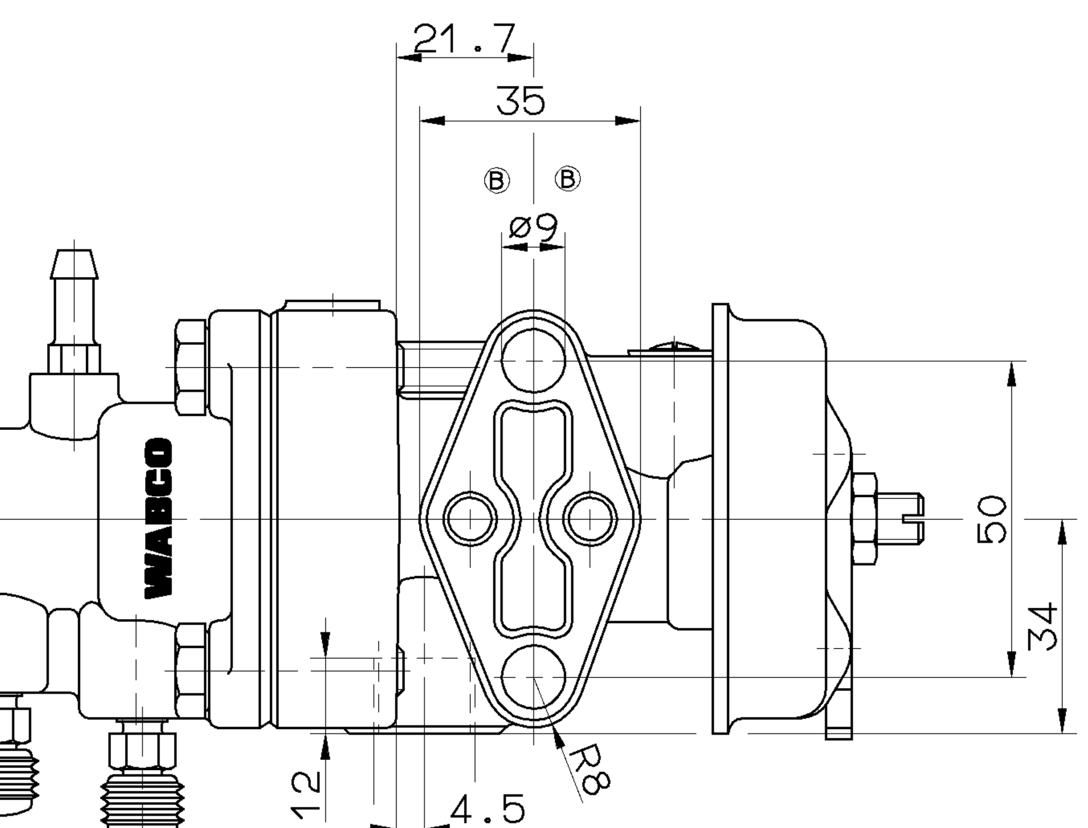

M16×1.5
M=MAX.34Nm

POSITION OF LEVER HEBELSTELLUNG POSITION DU LEVIER POSIZIONE DELLA LEVA		I	II
	P1	8.5 bar	8.5 bar
	P2	0 bar	8.5 bar

** ADDITIONAL STROKE:
UEBERHUB:
COURSE ADDITIONELLE: MAX. 55°
SOVRACCORSA:

HANDBRAKE LEVER ADJUSTABLE BY 120°
HANDBREMSHEBEL VERSTELLBAR UM 120°
LEVIER DU FREIN A MAIN REGLABLE TOUS LES 120°
LEVA DI COMMANDO A MANNO REGOLABILE 120°

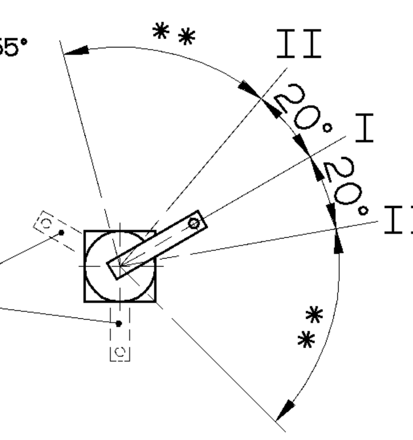

GENERAL SPECIFICATION: JED-334
FURTHER TECHNICAL DATA:
DOC. CODE: SHEET: TO

GENERAL TOLERANCES

CLASS 1)		≤50	>50 ≤180	>180 ≤400	>400	
FINE		0,5	1,0	1,5	2,0	
MEDIUM	×	1,0	2,0	3,0	4,0	± 3°
COARSE		2,0	3,5	5,0	6,5	

RANGE OF NOMINAL DIMENSIONS (± mm)

TAPPED HOLES ACC. ISO 4039 / JED-152
1) TOLERANCE CLASS APPLIED CROSSMARKED

DCN-NO.	REV.	DATE
059616	6×B	97-07-31
059618	1×A	96-09-25

CADAM-DRAWING COPYRIGHT

	DATE	SIGNATURE
DRAWN:	96-09-25	GIESEKE
CHECKED:	96-09-25	FABIAN
STANDARDIZATION:		

WABCO

TRAILER CONTROL VALVE
ANHAENGER-STEUERVENTIL
VALVE DE COMMANDE DE REM.
VALVOLA DI COMANDO FR. RI.

MASS	SCALE	PRODUCT IDENTIFICATION NO.	DOC. CODE	SHEET
1.4 KG	1:1 (2:1)	470 015 218 0	605	1/1
SIZE	T.R.I.	SHAPE CODE	REPLACEMENT FOR	
A 1	140		470 015 218 0 OF 96-08-20 (A)	

100mm

EXPERT CODE 737
PRODUCT TYPE 01X

1609/016/3/04.93
605/653

TOUTE COMMUNICATION OU REPRODUCTION DE CE DOCUMENT, TOUTE EXPLOITATION OU COMMUNICATION DE SON CONTENU SONT INTERDITES, SAUF AUTORISATION EXPRESSE. TOUT MANQUEMENT A CETTE REGLE CONSTITUE UN ABUS EVIDENT ET EXPOSE SON AUTEUR AU VERSEMENT DE DOMMAGES ET INTERETS. TOUS DROITS DE PROPRIETE INDUSTRIELLE RESERVES, NOTAMMENT EN MATIERE DE BREVETS ET DE MODELES.
WEITERGABE SOWIE VERVIELFAELTIGUNG DIESER UNTERLAGE, VERWERTUNG UND MITTEILUNG IHRES INHALTS NICHT GESTATTET, SOWEIT NICHT AUSDRUECKLICH ZUGESTANDEN. ZUWIDERHANDLUNGEN STELLEN EINEN OFFENSICHTLICHEN MISSBRAUCH DAR UND VERPFLICHTEN ZU SCHADENERSATZ. ALLE RECHTE FUER DEN FALL DER PATENTERTEILUNG ODER GEBRAUCHSMUSTER-EINTRAGUNG VORBEHALTEN.
NON E PERMESSO CONSEGNARE A TERZI O RIPRODURRE QUESTO DOCUMENTO, NE UTILIZZARNE IL CONTENUTO O RENDERLO COMUNQUE NOTO A TERZI SENZA AUTORIZZAZIONE ESPLICITA. OGNI INFRAZIONE COSTITUIRA UN EVIDENTE ABUSO E COMPORTERA IL RISARCIMENTO DEI DANNI SUBITI. E'FATTA RISERVA DI TUTTI I DIRITTI DERIVANTI DA BREVETTI O MODELLI.
COPYING OF THIS DOCUMENT AND GIVING IT TO OTHERS AND THE USE OR COMMUNICATION OF THE CONTENTS THEREOF, ARE FORBIDDEN WITHOUT EXPRESS AUTHORITY. CONTRAVENTION OF THIS RESTRICTION WILL CONSTITUTE AN EVIDENT ABUSE AND RESULT IN A LIABILITY TO THE PAYMENT OF DAMAGES. ALL RIGHTS ARE RESERVED IN THE EVENT OF THE GRANT OF PATENT OR REGISTRATION OF A UTILITY MODEL OR DESIGN. THIS DOCUMENT IS THE SUBJECT OF COPYRIGHT.