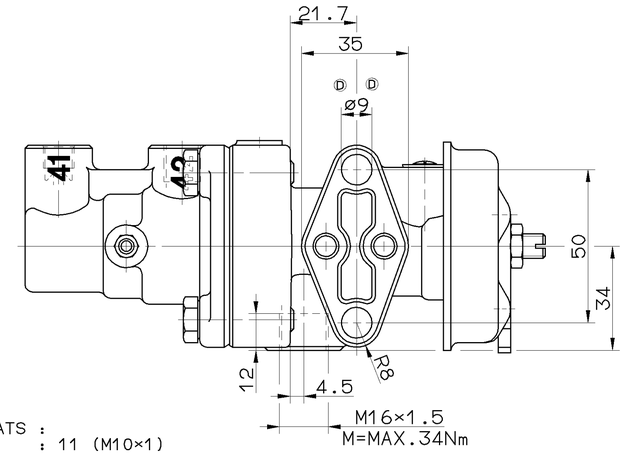

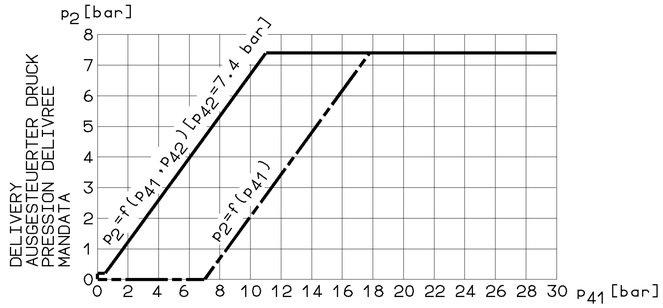

HYDRAULIC CONTROL PRESSURE
HYDRAULISCHER STEUERDRUCK
PRESSION HYDRAULIQUE DE COMMANDE
PRESSIONE IDRAULICO DI COMANDO

WIDTH ACROSS FLATS :
SCHLUESSELWEITE : 11 (M10×1)
SURPLATS :
LARGHEZZA IN CHIAVE:
M=7+2 Nm (E)

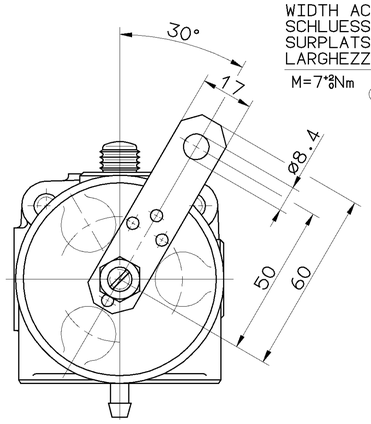

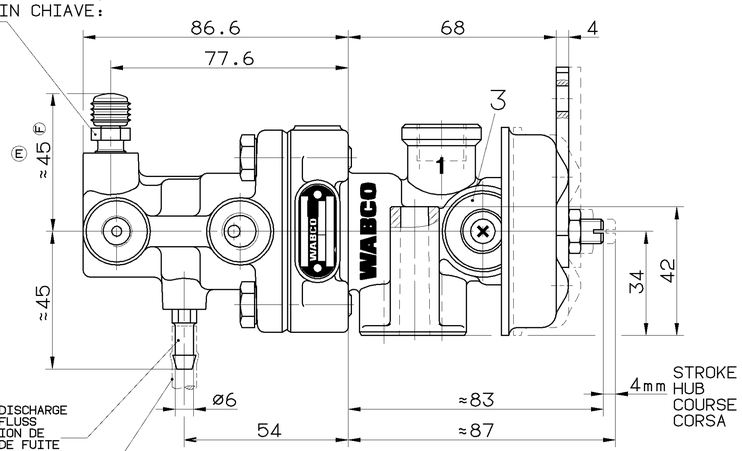

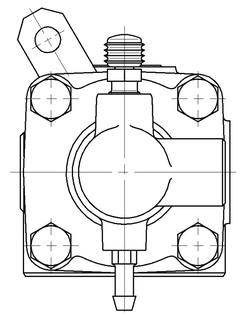

SUPPLY VORRAT ALIMENTATION ALIMENTAZIONE	OUTLET AUSGANG SORTIE USCITA	EXHAUST ENTLUEFTUNG ECHAPPEMENT SCARICO
1	2	3

41 HYDRAULIC CONTROL PRESSURE
HYDRAULISCHER STEUERDRUCK
PRESSION HYDRAULIQUE DE COMMANDE
PRESSIONE IDRAULICO DI COMANDO

42 PNEUMATIC CONTROL PRESSURE
PNEUMATISCHER STEUERDRUCK
PRESSION PNEUMATIQUE DE COMMANDE
PRESSIONE PNEUMATICA DI COMANDO

MEDIUM PNEUMATIC PART: AIR
MEDIUM PNEUMATIKTEIL: LUFT
FLUIDE PARTIE PNEUMATIQUE: AIR
FLUIDO PARTE PNEUMATICA: ARIA

WORKING PRESSURE:
BETRIEBSDRUCK:
PRESSION D'UTILISATION: p_e max.= 7 bar (TEMPORARILY: (KURZZEITIG: (DE COURTE DUREE: (BREVE TEMPO SOLO: p_e max.= 10 bar)
PRESSIONE DI ESERCIZIO:

MEDIUM HYDRAULIC PART: MINERAL OIL
MEDIUM HYDRAULIKTEIL: MINERALOEL
FLUIDE PARTIE HYDRAULIQUE: HUILE MINERALE
FLUIDO PARTE IDRAULICA: OLIO MINERALE

WORKING PRESSURE:
BETRIEBSDRUCK:
PRESSION D'UTILISATION: p_e max.= 50 bar (TEMPORARILY: (KURZZEITIG: (DE COURTE DUREE: (BREVE TEMPO SOLO: p_e max.= 120 bar)
PRESSIONE DI ESERCIZIO:

HYDRAULIC WORKING VOLUME:
HYDRAULISCHES ARBEITSVOLUMEN: 41 ≤ 2.0 cm³
VOLUME HYDRAULIQUE ABSORBE:
VOLUME IDRAULICO ASSORBITO:

RESIDUAL PRESSURE IN THE HYDRAULIC SYSTEM:
RUECKHALTEDRUCK IM HYDRAULIKSYSTEM:
PRESSION DE RETENUE AU SYSTEME HYDRAULIQUE: p_{41} ≤ 0.1 bar
PRESSIONE DI RITENUTA NEL SISTEMA IDRAULICO:

THERMAL RANGE OF APPLICATION:
THERMISCHER ANWENDUNGSBEREICH:
GAMME D'APPLICATION THERMIQUE: -40°C...+80°C
CAMPO DI APPLICAZIONE TERMICA:

INSTALLATION: VENTING SCREW MUST BE AT TOP
EINBAULAGE: ENTLUEFTUNGSSCHRAUBE MUSS NACH OBEN ZEIGEN
POSITION D'INSTALLATION: BOUCHON DE PURGE DOIT ETRE MONTE EN HAUT
POSIZIONE DI MONTAGGIO: LA VITE DI SCARICO DEVE ESSERE IN ALTO

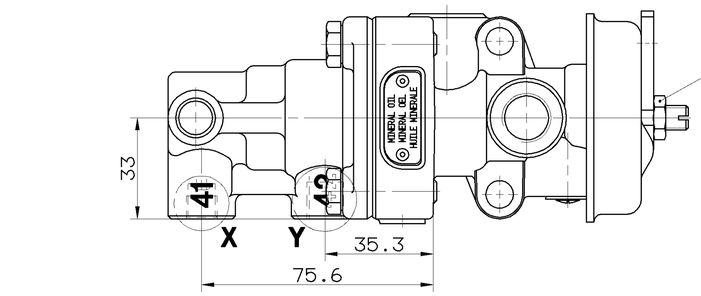

MARKED WITH RED PAINT
MIT ROTEM LACK GEKENNZEICHNET
MARQUE AVEC VERNIS ROUGE
MARCARE CON VERNICE ROSSA

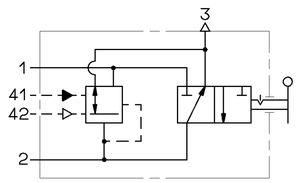

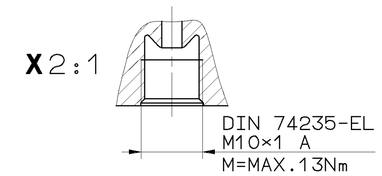

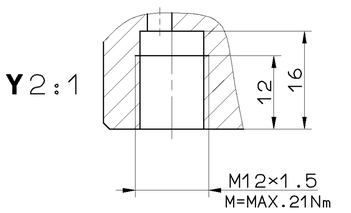

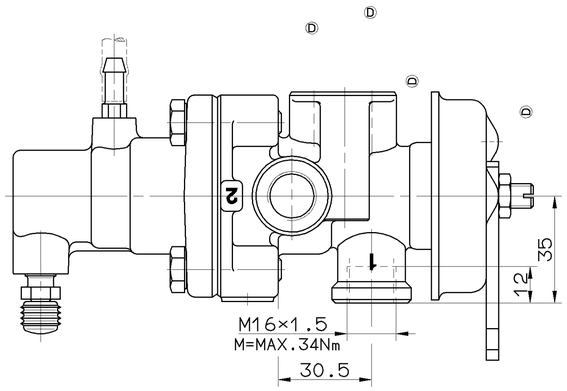

POSITION OF LEVER HEBELSTELLUNG POSITION DU LEVIER POSIZIONE DELLA LEVA		I	II
	P1	7 bar	7 bar
	P2	0 bar	7 bar

ADDITIONAL STROKE:
** UEBERHUB:
COURSE ADDITIONELLE: MAX. 55°
SOVRACCORSA:

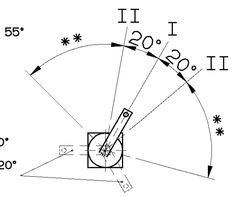

HANDBRAKE LEVER
ADJUSTABLE BY 120°
HANDBREMSHEBEL
VERSTELLBAR UM 120°
LEVIER DU FREIN
A MAIN REGLABLE
TOUS LES 120°
LEVA DI COMANDO
A MANNO REGOLABILE 120°

GENERAL SPECIFICATION: JED-334					
FURTHER TECHNICAL DATA:					
DOC. CODE:		SHEET:		TO	
GENERAL TOLERANCES					
CLASS 1)	RANGE OF NOMINAL DIMENSIONS (± mm) ≤50	> 50 ≤180	>180 ≤400	>400	
FINE		0,5	1,0	1,5	2,0
MEDIUM	×	1,0	2,0	3,0	4,0 ± 3°
COARSE		2,0	3,5	5,0	6,5
TAPPED HOLES ACC. ISO 4039 / JED-152					
1) TOLERANCE CLASS APPLIED CROSSMARKED					

DCN-NO.	REV.	DATE
060583	1×F	99-04-09
059672	2×E	98-11-19
059616	6×D	97-07-31
051798	1×C	94-12-01

100mm

CADAM-DRAWING COPYRIGHT
DATE SIGNATURE
DRAWN: 94-12-01 GIESEKE
CHECKED: ULRICH
STANDARDIZATION: PANTZER

WABCO

TRAILER CONTROL VALVE
ANHAENGER-STEUERVENTIL
VALVE DE COMMANDE DE REM.
VALVOLA DI COMANDO FR. RI.

MASS	SCALE	PRODUCT IDENTIFICATION NO.	DOC. CODE	SHEET
1.4 KG	1:1 (2:1)	470 015 255 0	605	1/1
SIZE A 1	T.R.I. 140	SHAPE CODE	REPLACEMENT FOR 470 015 255 0 (C) OF 87-06-22	

EXPERT CODE 7 3 7 PRODUCT TYPE 0 1 X

TOUTE COMMUNICATION OU REPRODUCTION DE CE DOCUMENT, TOUTE EXPLOITATION OU COMMUNICATION DE SON CONTENU, NE SONT PERMISES QU'AVEC L'AUTORISATION ECRITE DE WABCO. TOUTES LES DONNEES, DESSINS, ETC. DOIVENT ETRE RENVOYES SANS DELAI SUR SIMPLE DEMANDE.
NON E' PERMESSO CONSEGNARE A TERZI O RIPRODURRE QUESTO DOCUMENTO, NE UTILIZZARE IL CONTENUTO O RENDERLO COMUNICATO PER QUALSIASI SCOPO SENZA AUTORIZZAZIONE SCRITTA DELLA WABCO. TUTTI I DISEGNI, ECC. DEVONO ESSERE RESTITUITI SENZA DILAZIONE SU SEMPLICE RICHIESTA.
NOTE: CE DOCUMENT ET LA COMMUNICATION DE SON CONTENU A DES TIERS OU LEUR EN FAIRE UTILISATION SONT INTERDITS SANS AUTORISATION ECRITE DE WABCO. TOUS DESSINS, ETC. DOIVENT ETRE RENVOYES SANS DELAI SUR SIMPLE DEMANDE.
THIS DOCUMENT AND GIVING IT TO OTHERS AND THE USE OR COMMUNICATION OF THE CONTENTS THEREOF, ARE FORBIDDEN WITHOUT WRITTEN AUTHORISATION FROM WABCO. ALL DRAWINGS, ETC. MUST BE RETURNED WITHOUT DELAY ON SIMPLE REQUEST.
GEBRAUCHSMUSTER-EINTRAGUNG VORBEHALTEN. ALLE RECHTE FUER DEN FALL DER PATENTERTEILUNG ODER EINTRAGUNG VON GEBRAUCHSMUSTERN VORBEHALTEN.
WHEN REGISTRATION OF A UTILITY MODEL OR DESIGN THIS DOCUMENT IS THE SUBJECT OF COPYRIGHT.

1995/016/0/04.93
6000/003