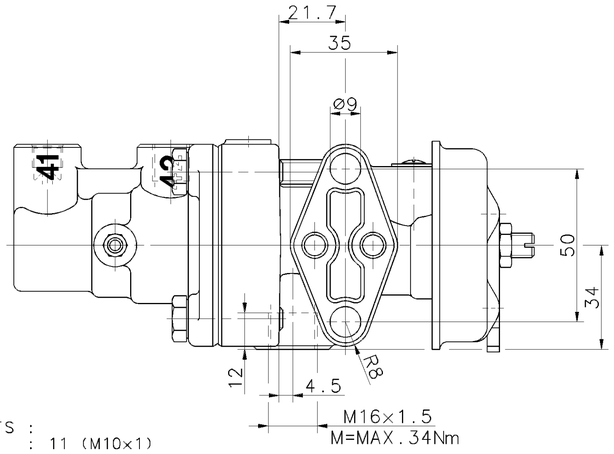

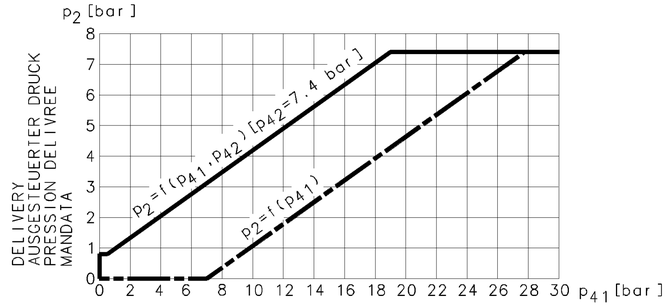

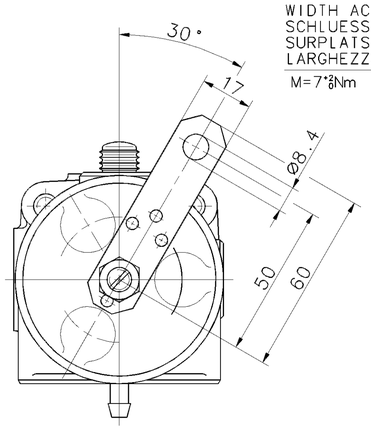

WIDTH ACROSS FLATS :
SCHLUESSELWEITE : 11 (M10×1)
SURPLATS :
LARGHEZZA IN CHIAVE :
M=7*2Nm

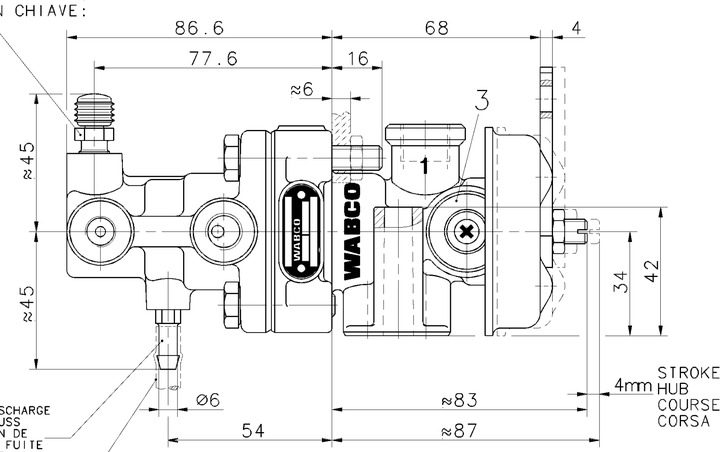

LEAK OIL DISCHARGE
LECKOELABFLUSS
RECUPERATION DE
L' HUILE DE FUITE
RECUPERO DELL'
OLIO DEFLUITO

MIN. LENGTH OF HOSE:
MINDEST-SCHLAUCHLAENGE:
LONGUEUR DE FLEXIBLE MINI: 200mm
LUNGHEZZA DI FLESSIBILE MIN:

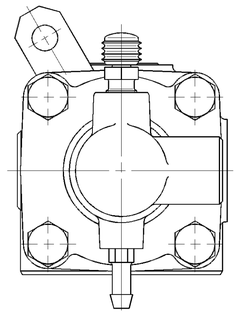

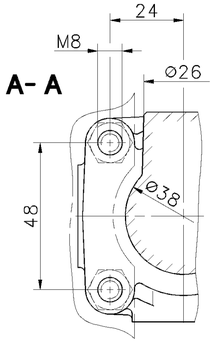

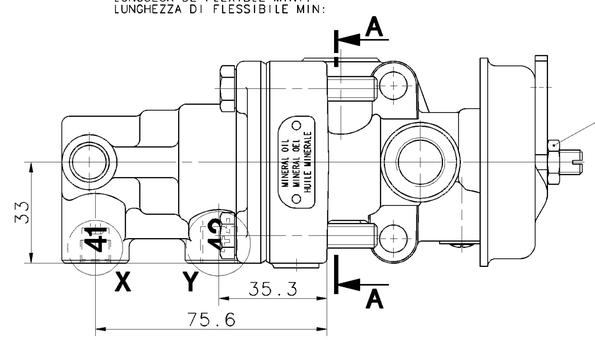

MARKED WITH RED PAINT
MIT ROTEM LACK GEKENNZEICHNET
MARQUE AVEC VERNIS ROUGE
MARCARE CON VERNICE ROSSA

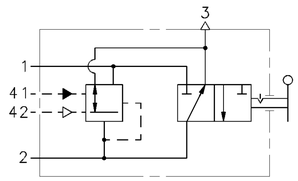

X 2 : 1

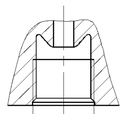

DIN 74235-EL
M10×1 A
M=MAX. 13Nm

Y 2 : 1

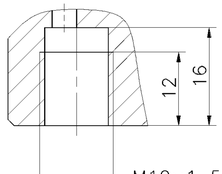

M12×1.5
M=MAX.21Nm

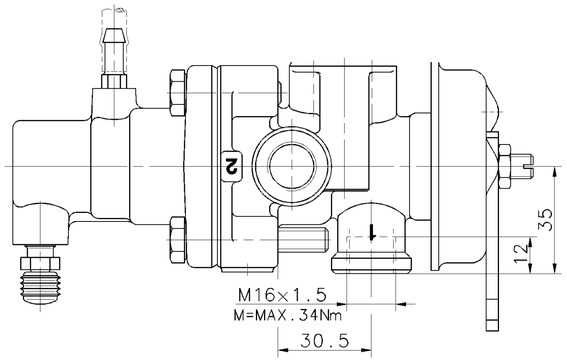

M16×1.5
M=MAX.34Nm
30.5

SUPPLY
1 VORRAT
ALIMENTATION
ALIMENTAZIONE

OUTLET
2 AUSGANG
SORTIE
USCITA

EXHAUST
3 ENTLUEFTUNG
ECHAPPEMENT
SCARICO

41 HYDRAULIC CONTROL PRESSURE
HYDRAULISCHER STEUERDRUCK
PRESSION HYDRAULIQUE DE COMMANDE
PRESSIONE IDRAULICO DI COMANDO

42 PNEUMATIC CONTROL PRESSURE
PNEUMATISCHER STEUERDRUCK
PRESSION PNEUMATIQUE DE COMMANDE
PRESSIONE PNEUMATICA DI COMANDO

MEDIUM PNEUMATIC PART: AIR
MEDIUM PNEUMATIKTEIL: LUFT
FLUIDE PARTIE PNEUMATIQUE: AIR
FLUIDO PARTE PNEUMATICA: ARIA

WORKING PRESSURE:
BETRIEBSDRUCK:
PRESSION D'UTILISATION: p_e max. = 7 bar (TEMPORARILY: (KURZZEITIG: (DE COURTE DUREE: (BREVE TEMPO SOLO: p_e max. = 10 bar)
PRESSIONE DI ESERCIZIO:

MEDIUM HYDRAULIC PART: MINERAL OIL
MEDIUM HYDRAULIKTEIL: MINERALOEL
FLUIDE PARTIE HYDRAULIQUE: HUILE MINERALE
FLUIDO PARTE IDRAULICA: OLIO MINERALE

WORKING PRESSURE:
BETRIEBSDRUCK:
PRESSION D'UTILISATION: p_e max. = 50 bar (TEMPORARILY: (KURZZEITIG: (DE COURTE DUREE: (BREVE TEMPO SOLO: p_e max. = 120 bar)
PRESSIONE DI ESERCIZIO:

HYDRAULIC WORKING VOLUME:
HYDRAULISCHES ARBEITSVOLUMEN: 41 ≤ 2.0 cm³
VOLUME HYDRAULIQUE ABSORBE:
VOLUME IDRAULICO ASSORBITO:

RESIDUAL PRESSURE IN THE HYDRAULIC SYSTEM:
RUECKHALTEDRUCK IM HYDRAULIKSYSTEM:
PRESSION DE RETENUE AU SYSTEME HYDRAULIQUE: p_{41} ≤ 0.1 bar
PRESSIONE DI RITENUTA NEL SISTEMA IDRAULICO:

THERMAL RANGE OF APPLICATION:
THERMISCHER ANWENDUNGSBEREICH:
GAMME D'APPLICATION THERMIQUE: -40°C...+80°C
CAMPO DI APPLICAZIONE TERMICA:

INSTALLATION: VENTING SCREW MUST BE AT TOP
EINBAULAGE: ENTLUEFTUNGSSCHRAUBE MUSS NACH OBEN ZEIGEN
POSITION D'INSTALLATION: BOUCHON DE PURGE DOIT ETRE MONTE EN HAUT
POSIZIONE DI MONTAGGIO: LA VITE DI SCARICO DEVE ESSERE IN ALTO

POSITION OF LEVER / HEBELSTELLUNG / POSITION DU LEVIER / POSIZIONE DELLA LEVA	I	II
P1	7 bar	7 bar
P2	0 bar	7 bar

ADDITIONAL STROKE:
UEBERHUB:
** COURSE ADDITIONELLE: MAX. 55°
SOVRACCORSA:

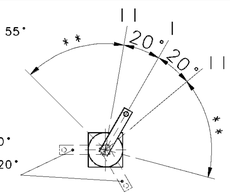

HANDBRAKE LEVER
ADJUSTABLE BY 120°
HANDBREMSHEBEL
VERSTELLBAR UM 120°
LEVIER DU FREIN
A MAIN REGLABLE
TOUS LES 120°
LEVA DI COMMANDO
A MANNO REGOLABILE 120°

GENERAL SPECIFICATION: JED-334					
FURTHER TECHNICAL DATA:					
DOC. CODE:		SHEET: 10			
GENERAL TOLERANCES					
CLASS 1)	RANGE OF NOMINAL DIMENSIONS (± mm) ≤50	>50 ≤180	>180 ≤400	>400	
FINE		0,5	1,0	1,5	2,0
MEDIUM	X	1,0	2,0	3,0	4,0 ± 3°
COARSE		2,0	3,5	5,0	6,5
TAPPED HOLES ACC. ISO 4039 / JED-152					
1) TOLERANCE CLASS APPLIED CROSSMARKED					

DCN-NO. | REV. | DATE

100mm

CADAM-DRAWING COPYRIGHT		WABCO
DATE	SIGNATURE	
DRAWN: MEINKING	01-12-12	TRAILER CONTROL VALVE
CHECKED: FABIAN	01-12-12	ANHAENGER-STEUERVENTIL
STANDARDIZATION:		VALVE DE COMMANDE DE REM.
		VALVOLA DI COMANDO FR. RI.

MASS	SCALE	PRODUCT IDENTIFICATION NO.	DOC. CODE	SHEET
1.1 KG	1:1 (2:1)	470 015 257 0	605	1/1
SIZE	I.R.I.			
A 1	140		SHAPE CODE	REPLACEMENT FOR

EXPERT CODE 7 3 7

PRODUCT TYPE 0 1 X

1009/016/3/04.93
605/633

TOUTE COMMUNICATION OU REPRODUCTION DE CE DOCUMENT, TOUTE EXPLOITATION OU COMMUNICATION DE SON CONTENU, NE SONT PERMIS QUE POUR DES BUTS INTERIEURS. TOUTE COMMUNICATION OU REPRODUCTION DE CE DOCUMENT, TOUTE EXPLOITATION OU COMMUNICATION DE SON CONTENU, NE SONT PERMIS QUE POUR DES BUTS INTERIEURS. TOUTE COMMUNICATION OU REPRODUCTION DE CE DOCUMENT, TOUTE EXPLOITATION OU COMMUNICATION DE SON CONTENU, NE SONT PERMIS QUE POUR DES BUTS INTERIEURS.
NON È PERMESSO CONSEGNARE A TERZI, O RIPRODURRE QUESTO DOCUMENTO, NE UTILIZZARNE IL CONTENUTO O RENDERNE LA CONOSCENZA AD ALTRI, SALVO CHE PER USI INTERNI. NON È PERMESSO CONSEGNARE A TERZI, O RIPRODURRE QUESTO DOCUMENTO, NE UTILIZZARNE IL CONTENUTO O RENDERNE LA CONOSCENZA AD ALTRI, SALVO CHE PER USI INTERNI. NON È PERMESSO CONSEGNARE A TERZI, O RIPRODURRE QUESTO DOCUMENTO, NE UTILIZZARNE IL CONTENUTO O RENDERNE LA CONOSCENZA AD ALTRI, SALVO CHE PER USI INTERNI.
WEITERGABE SOWIE VERVIELFAELTIGUNG DIESES UNTERLAGE, VERWERTUNG UND MITTEILUNG IHRES INHALTS NICHT GESTATTET, SOWEIT NICHT AUSDRUECKLICH ZUGESTANDEN. ZUWIDERHANDLUNGEN VERPFLICHTEN ZUM SCHADENSERSATZ. WEITERGABE SOWIE VERVIELFAELTIGUNG DIESES UNTERLAGE, VERWERTUNG UND MITTEILUNG IHRES INHALTS NICHT GESTATTET, SOWEIT NICHT AUSDRUECKLICH ZUGESTANDEN. ZUWIDERHANDLUNGEN VERPFLICHTEN ZUM SCHADENSERSATZ. WEITERGABE SOWIE VERVIELFAELTIGUNG DIESES UNTERLAGE, VERWERTUNG UND MITTEILUNG IHRES INHALTS NICHT GESTATTET, SOWEIT NICHT AUSDRUECKLICH ZUGESTANDEN. ZUWIDERHANDLUNGEN VERPFLICHTEN ZUM SCHADENSERSATZ.
COPYING OF THIS DOCUMENT AND GIVING IT TO OTHERS AND THE USE OR COMMUNICATION OF THE CONTENTS THEREOF, ARE FORBIDDEN WITHOUT EXPRESS AUTHORITY. OFFENDERS ARE LIABLE TO THE PAYMENT OF DAMAGES. COPYING OF THIS DOCUMENT AND GIVING IT TO OTHERS AND THE USE OR COMMUNICATION OF THE CONTENTS THEREOF, ARE FORBIDDEN WITHOUT EXPRESS AUTHORITY. OFFENDERS ARE LIABLE TO THE PAYMENT OF DAMAGES. COPYING OF THIS DOCUMENT AND GIVING IT TO OTHERS AND THE USE OR COMMUNICATION OF THE CONTENTS THEREOF, ARE FORBIDDEN WITHOUT EXPRESS AUTHORITY. OFFENDERS ARE LIABLE TO THE PAYMENT OF DAMAGES.
THIS DOCUMENT IS THE SUBJECT OF COPYRIGHT OR GRANT OF PATENT OR REGISTRATION OF A UTILITY MODEL OR DESIGN.
THIS DOCUMENT IS THE SUBJECT OF COPYRIGHT OR GRANT OF PATENT OR REGISTRATION OF A UTILITY MODEL OR DESIGN.
THIS DOCUMENT IS THE SUBJECT OF COPYRIGHT OR GRANT OF PATENT OR REGISTRATION OF A UTILITY MODEL OR DESIGN.